YAMAHA

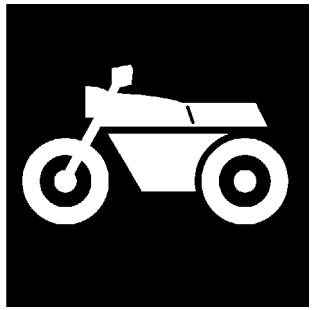

PARTS CATALOGUE

XVS650T (5FBS) U49
XVS650TC (5FBT) CALIFORNIA
XVS650T (5FBU) CANADA

1D5FB-100E1

(2D5FB-100E1)

YAMAHA GENUINE Parts & Accessories

2010/12/20

NEWS No.	DATE	COMMENT
PE0-MC-050052	May., 27, 2005	FIG26: SEAT LIST&ILLUSTRATION CORRECTION
PE0-MC-050125	Sep., 19, 2005	FIG.19: FENDER & FIG.26: SEAT LIST&ILLUSTRATION REVISION
PE0-MC-060043	May., 10, 2006	FIG.36: HEADLIGHT LIST&ILLUSTRATION CORRECTION
PE0-MC-060080	Sep., 11, 2006	FIG.22: DRIVE SHAFT LIST&ILLUSTRATION CORRECTIONS

A2

XVS650T/TC
PARTS CATALOGUE
©2004 by Yamaha Motor Co., Ltd.
1st edition, August 2004
All rights reserved.
Any reprinting or unauthorized use
without the written permission of
Yamaha Motor Co., Ltd.
is expressly prohibited.
Printed in Japan.

A3

XVS650T/TC

A4

FOREWORD

This Parts Catalogue is related to the parts for the model(s) on the cover page. When you are ordering replacement parts, please refer to this Parts Catalogue and quote both part numbers and part names correctly.

1. Modifications or additions which have been made after the issue of the Parts Catalogue will be announced in the Parts News.
   It is advisable that you make the necessary corrections to the Parts Catalogue according to the Parts News.

2. Abbreviations
   The following abbreviations are used in this Parts Catalogue.

   “UR” Use specified parts number.
   “UN” Use as many as needed.
   “AP” Alternate Parts
   “LM” Locally Made (Parts need to be ordered locally)
   “F#” Frame No. (Applicable machine No.)
   “O/S” Over Size

3. The number of components for assembly
   - Parts, which are to be supplied in an assembly, are listed with a dot (.) in front of the part name as shown below.
   - The numeral appearing to the right of each component part indicates the quantity of parts for each assembly unit.

PART NO.	DESCRIPTION	Q’TY	REMARKS
2F5–83310–60	FRONT FLASHER LIGHT ASSY	2	
115–83311–60	.BULB (6V–18W)	1	

4. Applicable colours of graphics are represented in the “REMARKS” as shown below.

PART NO.	DESCRIPTION	Q’TY	REMARKS
2N4–24110–00–X5	FUEL TANK COMP.	2	MXR
3J1–24240–10	.GRAPHIC, FUEL TANK	1	FOR MXR

5. Note that the illustrations for reference in finding parts numbers are not to be used for assembling. When assembling, please use the applicable service manual.

6. The asterisk (*) before a reference number indicates modified items after the first edition.

7. Applicable Serial No.

Engine Serial No.

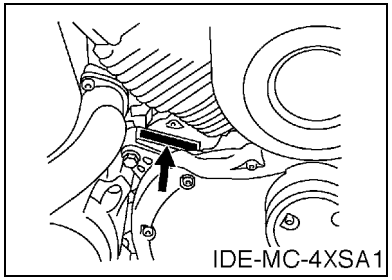

Frame Serial No.

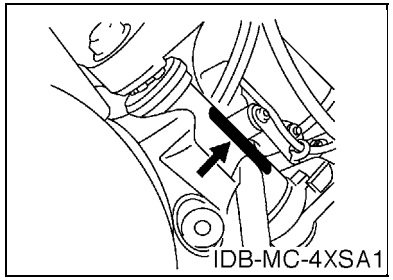

8. Applicable Colour Code (The (*) mark shows Model colour.)

Abbreviation	Colour Name	Colour Code
MBL2	MAT BLACK 2	0582
SL	SILVER	0035
SMX(*)	BLACK METALLIC X	0903

MODEL LABEL

(1) A label called “Model Label” is affixed in the location as indicated in (3) below. When using this parts catalogue, please be sure to cross–reference the “model code – production code No.” in the catalogue with the “model code – production code No.” indicated on the Model Label affixed onto the product concerned.

(2) “Model Label” Indication

a b ○ xxxx – xxx ● x c	a: Model Type Code b: Production Code No. c: Colouring Type

○ 4TW1–010 ● A

(3) Model Label Affixing Location

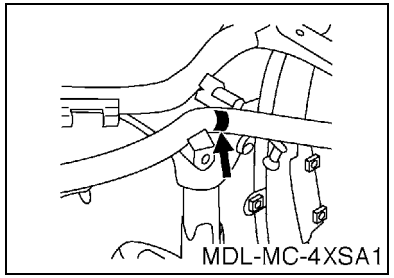

(4) Colouring Information

Model Code	Colouring Type Code	Colour Code	Colour Name	Abbreviation
5FBS	A	0903	BLACK METALLIC X	SMX
5FBT	A	0903	BLACK METALLIC X	SMX
5FBU	A	0903	BLACK METALLIC X	SMX

(5) Model Code – Production Code Number of Model Listed in This Parts Catalogue

Model Code	Production Code No.	Country (destination)	Model Code	Production Code No.	Country (destination)
5FBS	010	U49			
5FBT	010	CALIFORNIA			
5FBU	010	CANADA			

CONTENTS

ENGINE

CYLINDER HEAD B2
CYLINDER B4
CRANKSHAFT & PISTON B5
VALVE B6
CAMSHAFT & CHAIN B7
OIL PUMP B8
INTAKE B9
CARBURETOR B11
EXHAUST B14
CRANKCASE C3
CRANKCASE COVER 1 ..... C5
STARTER CLUTCH C7
CLUTCH C8
TRANSMISSION C10
MIDDLE DRIVE GEAR C11
SHIFT CAM & FORK C12
SHIFT SHAFT C13

CHASSIS

FRAME C14
FENDER D2
SIDE COVER D4
REAR ARM & SUSPENSION D6
DRIVE SHAFT D7
STEERING D9
FRONT FORK D10
FUEL TANK D12
SEAT D15
FRONT WHEEL E2
FRONT BRAKE CALIPER E3
REAR WHEEL E4
STEERING HANDLE & CABLE E6
FRONT MASTER CYLINDER E7
STAND & FOOTREST E8
GENERATOR E11
FLASHER LIGHT E12
METER E14
HEADLIGHT E15
TAILLIGHT F2
HANDLE SWITCH & LEVER F3
ELECTRICAL 1 ..... F4
ELECTRICAL 2 ..... F6

INDEX

NUMERICAL INDEX M1

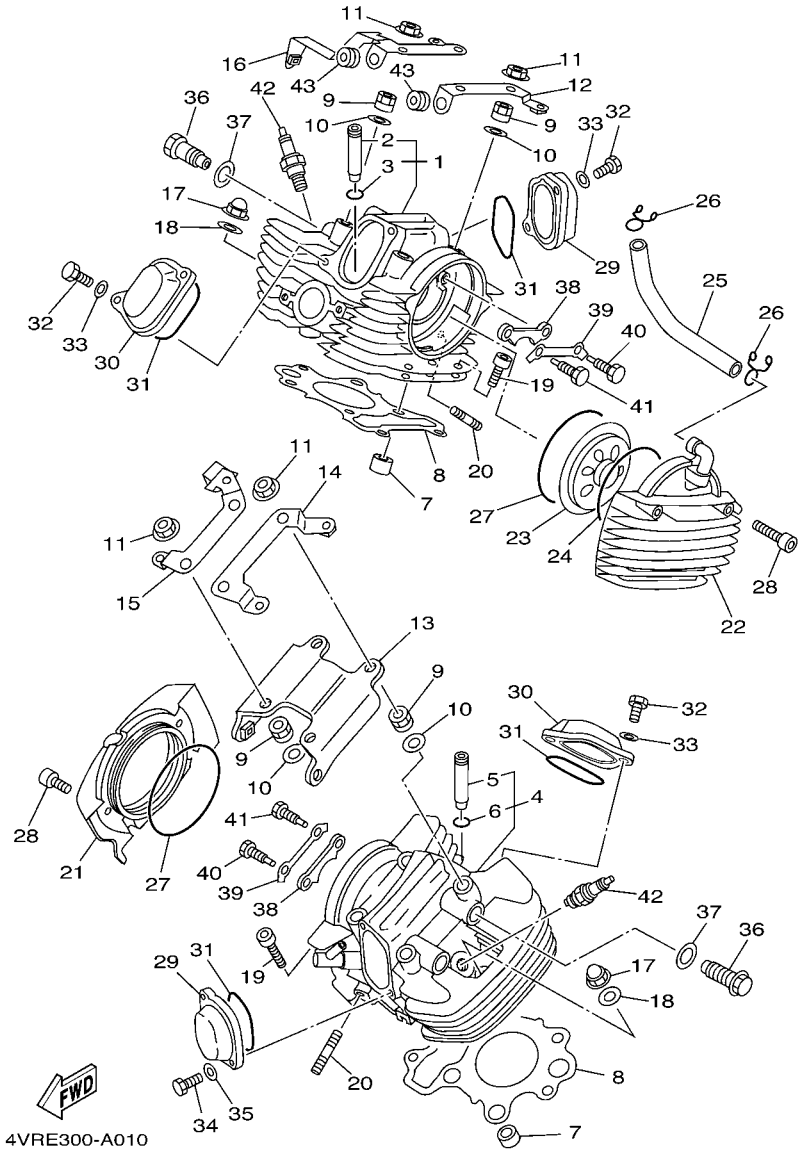

FIG. 1 CYLINDER HEAD

REF. NO.	PART NO.	DESCRIPTION	5FBS	5FBT	5FBU			REMARKS
1	5BN–11101–20	CYLINDER HEAD ASSY	1	1	1			
2	4H7–11133–11	.GUIDE, VALVE 1	2	2	2			
3	93440–12052	.CIRCLIP	2	2	2			
4	4XP–11101–20	CYLINDER HEAD ASSY	1	1	1			
5	4H7–11133–11	.GUIDE, VALVE 1	2	2	2			
6	93440–12052	.CIRCLIP	2	2	2			
7	99530–17016	PIN, DOWEL	4	4	4			
8	4VR–11181–10	GASKET, CYLINDER HEAD 1	2	2	2			
9	90179–10395	NUT	8	8	8			
10	90201–10131	WASHER, PLATE	8	8	8			
11	95707–10500	NUT, FLANGE	8	8	8			
12	4TR–11142–00	BRACKET, CYLINDER HEAD COVER 2	1	1	1			
13	4TR–11152–00	BRACKET, CYLINDER HEAD COVER	1	1	1			
14	4TR–1111F–00	PLATE	1	1	1			
15	4TR–1112F–00	PLATE 2	1	1	1			
16	4TR–1135A–00	BRACKET	1	1	1			
17	90176–08080	NUT, CROWN	2	2	2			
18	90201–08609	WASHER, PLATE	2	2	2			
19	90110–08019	BOLT, HEXAGON SOCKET HEAD	4	4	4			
20	95617–08630	BOLT, STUD	4	4	4			
21	4TR–11187–20	COVER, CYLINDER HEAD SIDE 3	1	1	1			
22	4TR–11186–20	COVER, CYLINDER HEAD SIDE 2	1	1	1			
23	22U–11165–00	PLATE, BREATHER	1	1	1			
24	93210–89568	O-RING	1	1	1			
25	4TR–11166–00	PIPE, BREATHER 1	1	1	1			
26	90467–14015	CLIP	2	2	2			
27	93211–00612	O-RING	2	2	2			

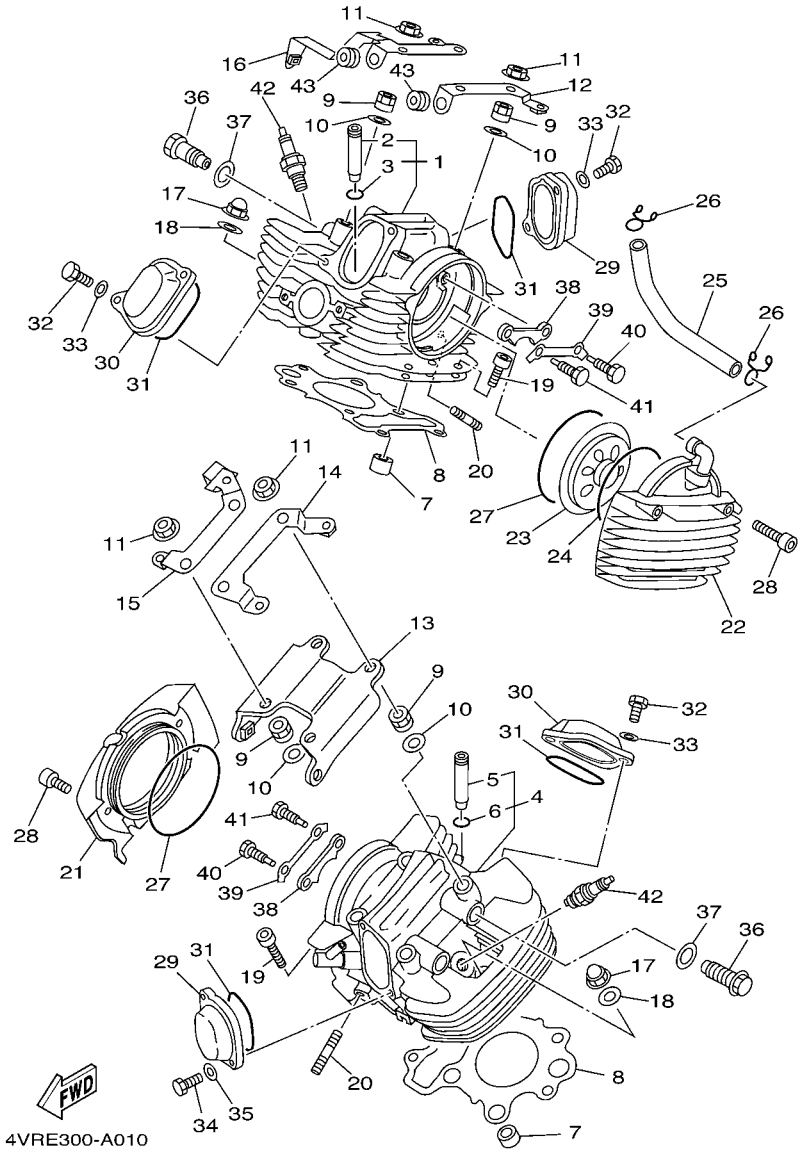

FIG. 1 CYLINDER HEAD

REF. NO.	PART NO.	DESCRIPTION	5FBS	5FBT	5FBU			REMARKS
28	91314–06035	BOLT	4	4	4			
29	22U–11186–00	COVER, CYLINDER HEAD SIDE 2	2	2	2			
30	22U–11187–00	COVER, CYLINDER HEAD SIDE 3	2	2	2			
31	93210–62446	O-RING	4	4	4			
32	97027–06016	BOLT	6	6	6			
33	92907–06600	WASHER, PLATE	6	6	6			
34	97024–06016	BOLT	2	2	2			
35	92904–06600	WASHER	2	2	2			
36	90401–16166	BOLT, UNION	4	4	4			
37	90430–17168	GASKET	4	4	4			
38	22U–1111F–01	PLATE	2	2	2			
39	90215–08229	WASHER, LOCK	2	2	2			
40	90109–08782	BOLT	2	2	2			
41	90109–08781	BOLT	2	2	2			
42	94701–00262	PLUG, SPARK (NGK DPR7EA)	2	2	2			
43	90480–13018	GROMMET	2	2	2			

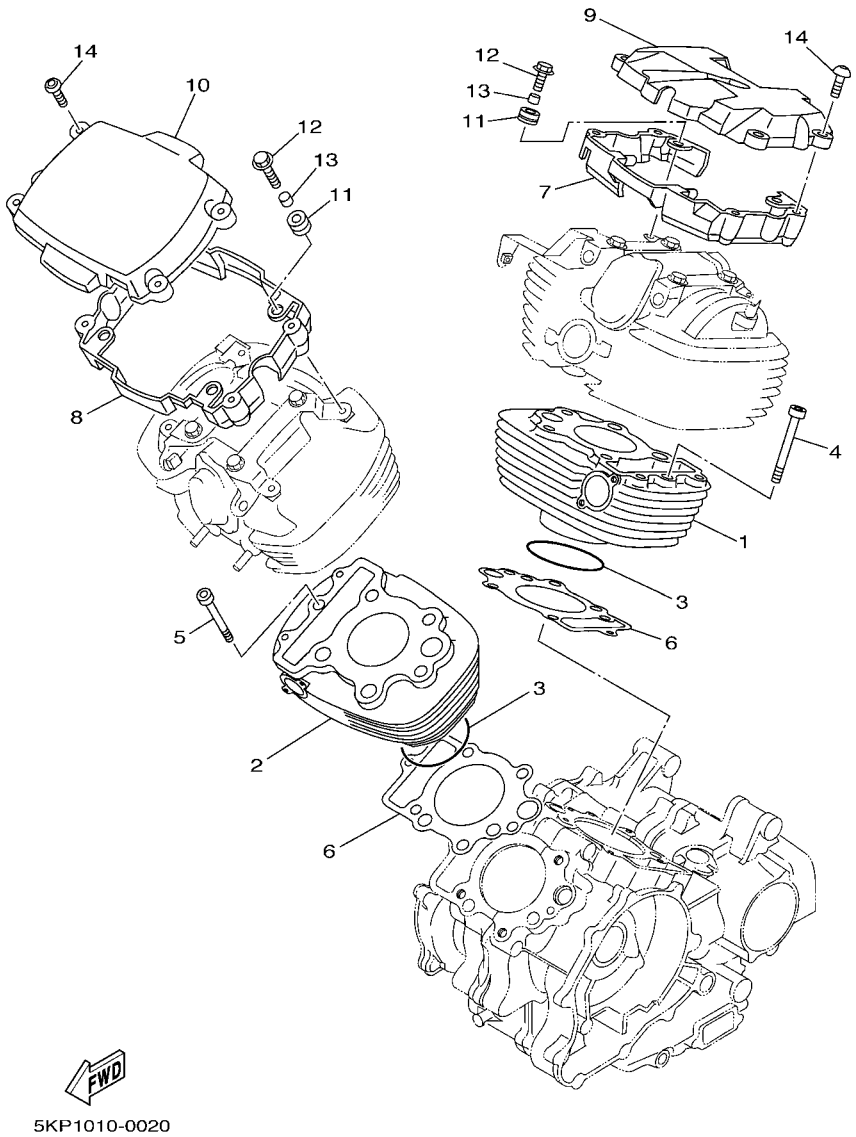

FIG. 2 CYLINDER

REF. NO.	PART NO.	DESCRIPTION	5FBS	5FBT	5FBU			REMARKS
1	4VR–11310–20	CYLINDER	1	1	1			
2	4VR–11320–20	CYLINDER 2	1	1	1			
3	93210–84724	O-RING	2	2	2			
4	91317–06085	BOLT	1	1	1			
5	90110–06011	BOLT, HEXAGON SOCKET HEAD	1	1	1			
6	4VR–11351–00	GASKET, CYLINDER	2	2	2			
7	4VR–11191–00	COVER, CYLINDER HEAD 1	1	1	1			
8	4VR–11192–00	COVER, CYLINDER HEAD 2	1	1	1			
9	4VR–11190–00	COVER, CYLINDER HEAD 1	1		1			
	4VR–11190–10	COVER, CYLINDER HEAD 1		1				
10	4VR–1111N–00	COVER 2	1	1	1			
11	90480–13018	GROMMET	6	6	6			
12	90119–06170	BOLT, WITH WASHER	6	6	6			
13	90387–06043	COLLAR	6	6	6			
14	90149–06302	SCREW	8	8	8			

FIG. 3 CRANKSHAFT & PISTON

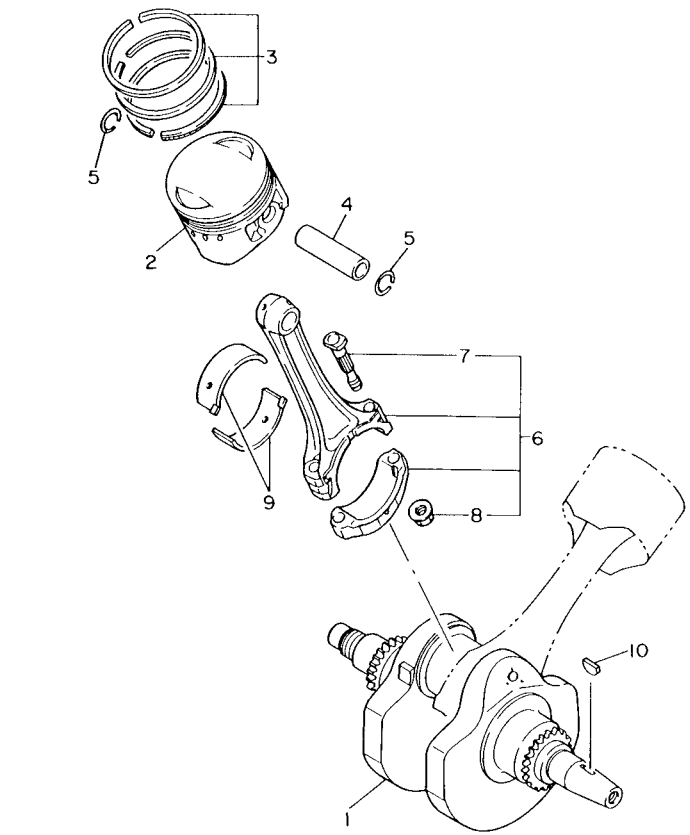

REF. NO.	PART NO.	DESCRIPTION	5FBS	5FBT	5FBU			REMARKS
1	4VR–11411–00	CRANKSHAFT	1	1	1			
2	4VR–11631–01–A0	PISTON (STD)	2	2	2			
	4VR–11636–00	PISTON (0.50MM O/S)	2	2	2			AP
	4VR–11638–00	PISTON (1.00MM O/S)	2	2	2			AP
3	4VR–11603–00	PISTON RING SET (STD)	2	2	2			
	4VR–11605–00	PISTON RING SET (0.50MM O/S)	2	2	2			AP
	4VR–11607–00	PISTON RING SET (1.00MM O/S)	2	2	2			AP
4	3LD–11633–00	PIN, PISTON	2	2	2			
5	93450–22027	CIRCLIP	4	4	4			
6	4VR–11650–00	CONNECTING ROD ASSY	2	2	2			
7	22U–11654–00	.BOLT, CONNECTING ROD	2	2	2			
8	90179–08327	.NUT	2	2	2			
9	3LD–11656–00	PLANE BEARING, CONNECTING ROD	4	4	4			UR BLUE
	3LD–11656–10	PLANE BEARING, CONNECTING ROD	4	4	4			UR BLACK
	3LD–11656–20	PLANE BEARING, CONNECTING ROD	4	4	4			UR BROWN
	3LD–11656–30	PLANE BEARING, CONNECTING ROD	4	4	4			UR GREEN
10	90280–05048	KEY, WOODRUFF	1	1	1			

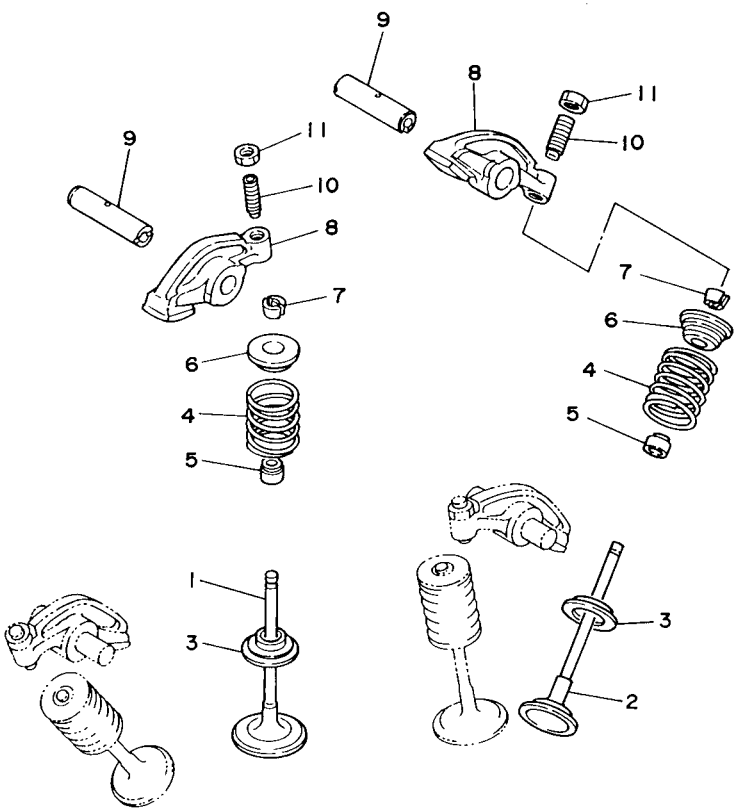

FIG. 4 VALVE

REF. NO.	PART NO.	DESCRIPTION	5FBS	5FBT	5FBU			REMARKS
1	4VR–12111–01	VALVE, INTAKE	2	2	2			
2	4VR–12121–01	VALVE, EXHAUST	2	2	2			
3	3Y1–12116–00	SEAT, VALVE SPRING	4	4	4			
4	3Y1–12114–01	SPRING, VALVE OUTER	4	4	4			
5	1J7–12119–01	SEAL, VALVE STEM	4	4	4			
6	3Y1–12117–01	RETAINER, VALVE SPRING	4	4	4			
7	1J7–12118–00	COTTER, VALVE	8	8	8			
8	22U–12151–00	ARM, VALVE ROCKER	4	4	4			
9	22U–12156–01	SHAFT, ROCKER 2	4	4	4			
10	22U–12159–00	SCREW, VALVE ADJUSTING	4	4	4			
11	90170–06128	NUT	4	4	4			

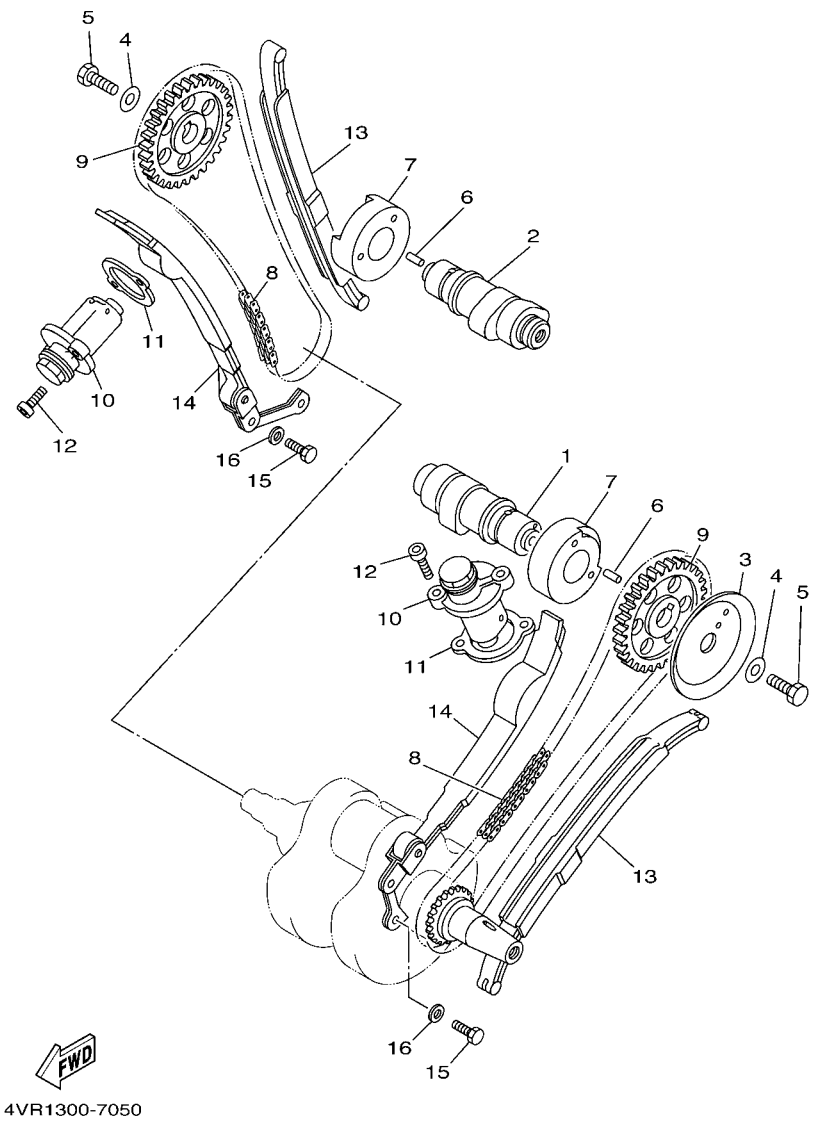

FIG. 5 CAMSHAFT & CHAIN

REF. NO.	PART NO.	DESCRIPTION	5FBS	5FBT	5FBU			REMARKS
1	4VR–12171–00	CAMSHAFT 1	1	1	1			
2	4VR–12181–00	CAMSHAFT 2	1	1	1			
3	22U–11145–00	PLATE, BREATHER 2	1	1	1			
4	90201–10591	WASHER, PLATE	2	2	2			
5	90101–10303	BOLT	2	2	2			
6	93605–10108	PIN, DOWEL	2	2	2			
7	90380–28131	BUSH, SOLID	2	2	2			
8	94591–41118	CHAIN	2	2	2			
9	22U–12176–01	SPROCKET, CAM CHAIN	2	2	2			
10	11H–12210–02	TENSIONER ASSY, CAM CHAIN	2	2	2			
11	3BT–12213–00	GASKET, TENSIONER CASE	2	2	2			
12	91314–06025	BOLT	4	4	4			
13	4VR–12231–00	GUIDE, STOPPER 1	2	2	2			
14	22U–12241–00	GUIDE, STOPPER 2	2	2	2			
15	97027–06016	BOLT	4	4	4			
16	92907–06600	WASHER, PLATE	4	4	4			

FIG. 6 OIL PUMP

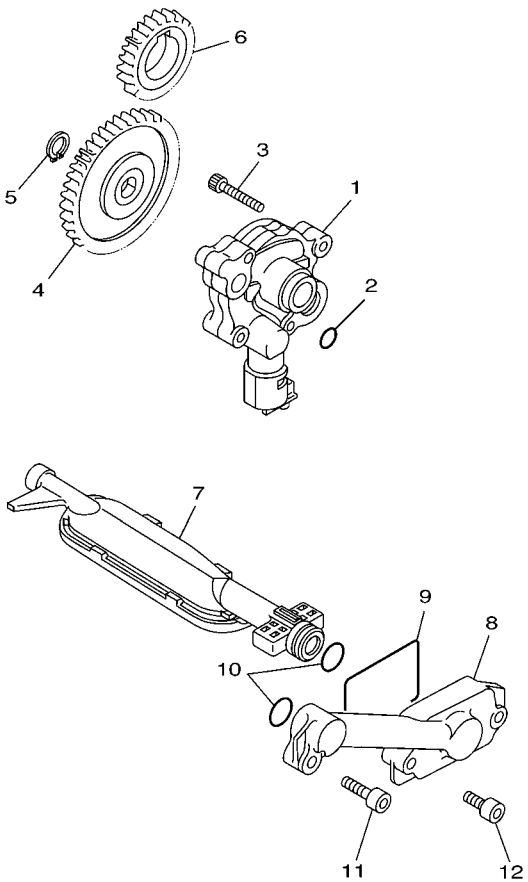

4VR1300-7060

REF. NO.	PART NO.	DESCRIPTION	5FBS	5FBT	5FBU			REMARKS
1	4VR–13300–00	OIL PUMP ASSY	1	1	1			
2	93210–10096	O-RING	1	1	1			
3	91317–06030	BOLT	3	3	3			
4	4VR–13325–00	GEAR, PUMP DRIVEN (39T)	1	1	1			
5	99009–11400	CIRCLIP	1	1	1			
6	22U–13324–00	GEAR, DRIVE (24T)	1	1	1			
7	4TR–13410–00	STRAINER HOUSING ASSY	1	1	1			
8	4VR–13417–00	COVER, STRAINER	1	1	1			
9	22U–13415–00	SEAL, OIL STRAINER	1	1	1			
10	93210–15151	O-RING	2	2	2			
11	91314–06025	BOLT	1	1	1			
12	91314–06020	BOLT	2	2	2			

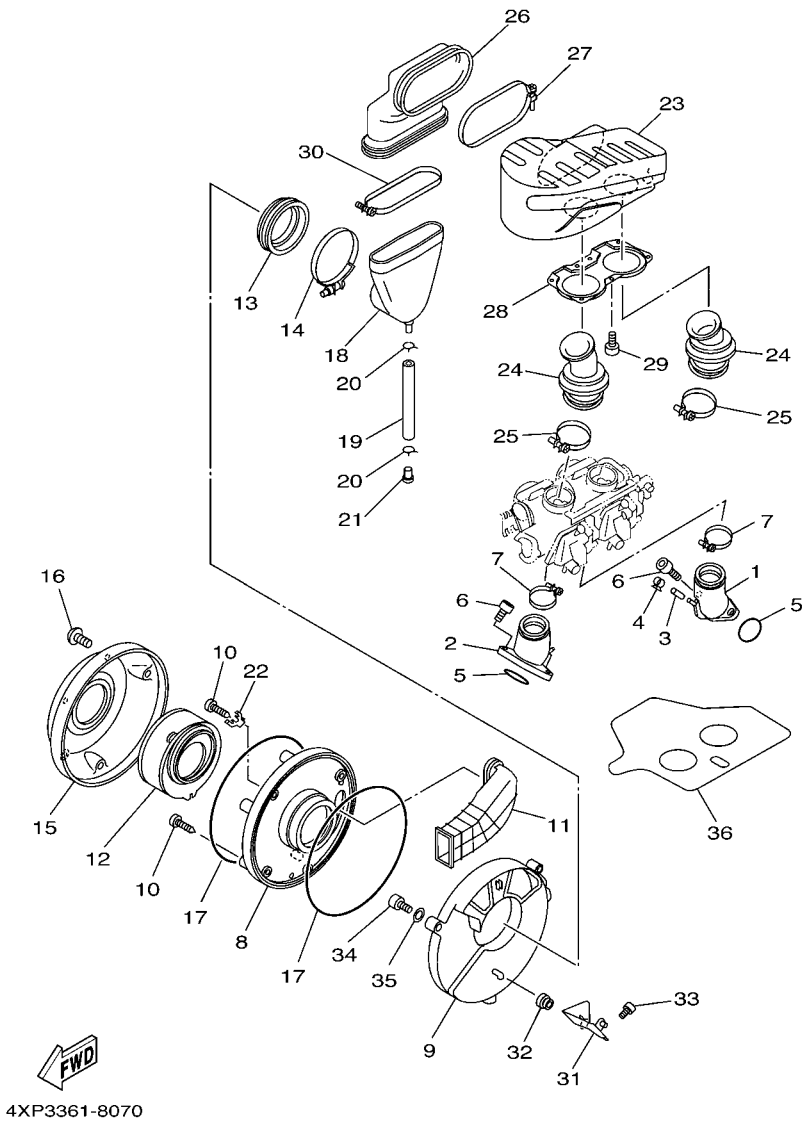

FIG. 7 INTAKE

REF. NO.	PART NO.	DESCRIPTION	5FBS	5FBT	5FBU			REMARKS
1	4TR–13586–01	JOINT, CARBURETOR 1	1	1	1			
2	4TR–13596–01	JOINT, CARBURETOR 2	1	1	1			
3	16G–13569–00	PLUG, BLIND	1	1	1			
4	90467–10039	CLIP	1	1	1			
5	93210–36769	O-RING	2	2	2			
6	91317–06020	BOLT	4	4	4			
7	4TR–13474–01	BAND	2	2	2			
8	4TR–14411–00	CASE, AIR CLEANER 1	1	1	1			
9	4TR–14417–01	COVER 1	1	1	1			
10	97707–50125	SCREW, TAPPING	4	4	4			
11	4TR–14437–00	DUCT	1	1	1			
12	4TR–14451–00	ELEMENT, AIR CLEANER	1	1	1			
13	4TR–14463–00	JOINT, AIR CLEANER 2	1	1	1			
14	4TR–14456–00	BAND	1	1	1			
15	4TR–14421–10	CASE, AIR CLEANER 2	1	1	1			
16	92014–05016	BOLT, BUTTON HEAD	3	3	3			
17	4TR–14452–00	SEAL	2	2	2			
18	4TR–1440G–00	JOINT, AIR FILTER 2	1	1	1			
19	90445–11587	HOSE (L100)	1	1	1			
20	90467–11106	CLIP	2	2	2			
21	90338–08174	PLUG	1	1	1			
22	4TR–14413–00	STAY	1	1	1			
23	4VR–14431–01	SILENCER, INTAKE 1	1	1	1			
24	4TR–14453–00	JOINT, AIR CLEANER 1	2	2	2			
25	90460–53200	CLAMP, HOSE	2	2	2			
26	4TR–1440F–00	JOINT, AIR FILTER 1	1	1	1			
27	4TR–13575–00	BAND	1	1	1			

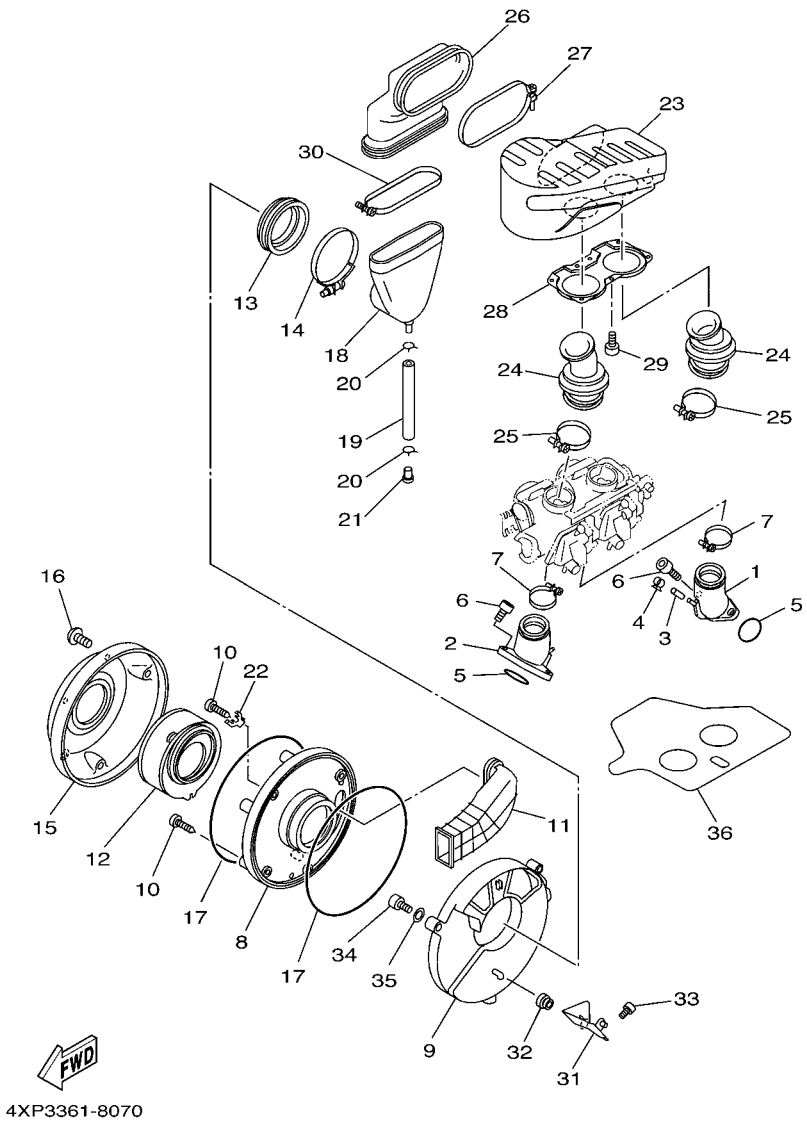

FIG. 7 INTAKE

REF. NO.	PART NO.	DESCRIPTION	5FBS	5FBT	5FBU			REMARKS
28	4VR–13594–00	COVER, MANIFOLD 2	1	1	1			
29	97707–40106	SCREW, TAPPING	7	7	7			
30	4TR–14455–00	BAND	1	1	1			
31	4TR–14499–00	STAY 2	1	1	1			
32	90480–13398	GROMMET	1	1	1			
33	91317–06016	BOLT	2	2	2			
34	91317–06020	BOLT	2	2	2			
35	92907–06600	WASHER, PLATE	2	2	2			
36	4TR–12682–01	PROTECTOR, HEAT	1	1	1			

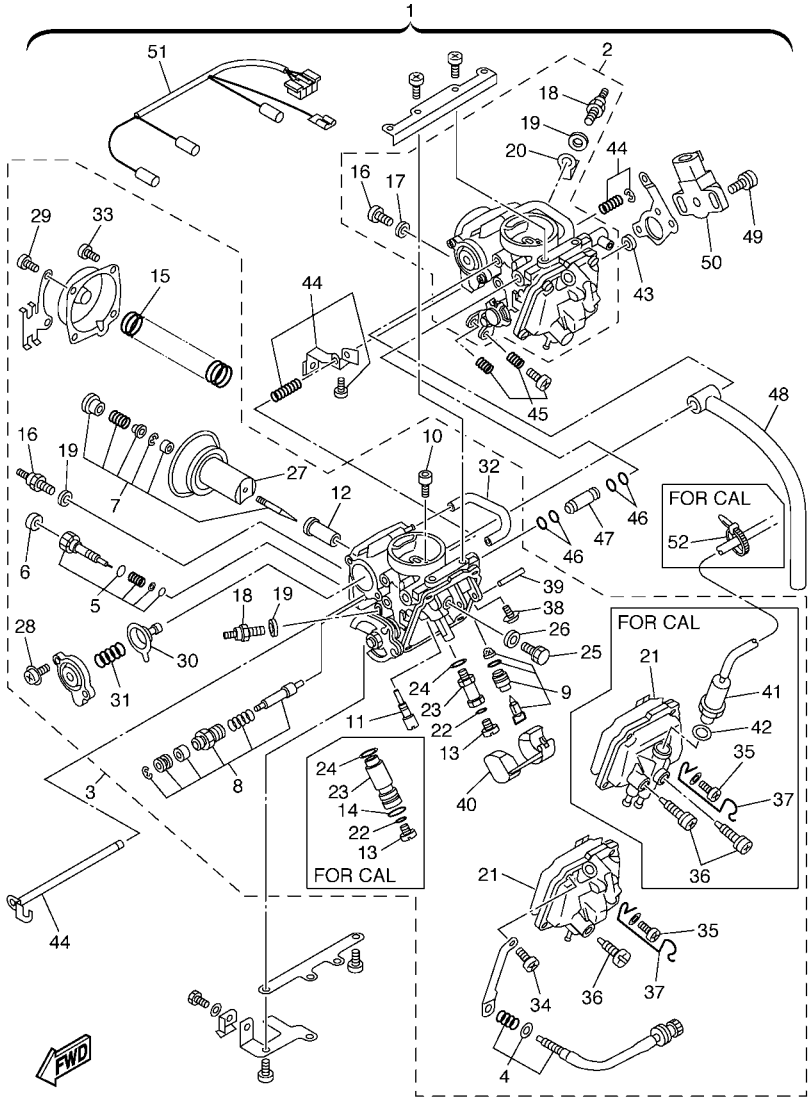

5FBN110-C080

FIG. 8 CARBURETOR

REF. NO.	PART NO.	DESCRIPTION	5FBS	5FBT	5FBU			REMARKS
1	5BN–14900–40	CARBURETOR ASSY	1		1			
	5SC–14900–20	CARBURETOR ASSY		1				
2	5BN–14901–40	.CARBURETOR ASSY 1	1		1			(#1) REAR
	5SC–14901–20	.CARBURETOR ASSY 1		1				(#1) REAR
3	5BN–14902–40	.CARBURETOR ASSY 2	1		1			(#2) FRONT
	5SC–14902–20	.CARBURETOR ASSY 2		1				(#2) FRONT
4	4TR–14103–00	..THROTTLE SCREW SET	1	1	1			(#2) FRONT
5	4LA–14105–00	..PILOT SCREW SET	1		1			
	4TR–14105–00	..PILOT SCREW SET		1				
6	3F9–14118–00	..CAP	1	1	1			
7	5BN–1490J–00	..NEEDLE SET	1	1	1			
8	4DN–1410A–01	..STARTER SET	1	1	1			
9	3CF–14107–10	..NEEDLE VALVE SET	1	1	1			
10	1HX–14231–20	..JET,PILOT AIR(#100)	1	1	1			
11	4KM–14142–20	..JET, PILOT (# 20)	1	1	1			
12	3DM–1414M–34	..NOZZLE, MAIN	1	1	1			
13	620–14231–18	..JET, MAIN (# 90)	1		1			
	3G2–1414E–36	..JET, MAIN (#91.3)		1				
14	8F2–14147–00	..O-RING		1				
15	4VR–14933–00	..SPRING, DIAPHRAGM	1	1	1			
16	3DM–14216–00	..SCREW	1		1			UR (#1) REAR
	5FU–83790–00	..HEATER ASSY (15W)	1	1	1			UR (#2) FRONT
17	127–14198–00	..GASKET	1		1			(#1) REAR
18	5FU–83790–10	..HEATER ASSY (20W)	1	1	1			
19	90201–08016	..WASHER, PLATE	1	1	1			UR (#1) REAR
	90201–08016	..WASHER, PLATE	2	2	2			UR (#2) FRONT
20	4DH–82103–00	..TERMINAL 1	1	1	1			(#1) REAR

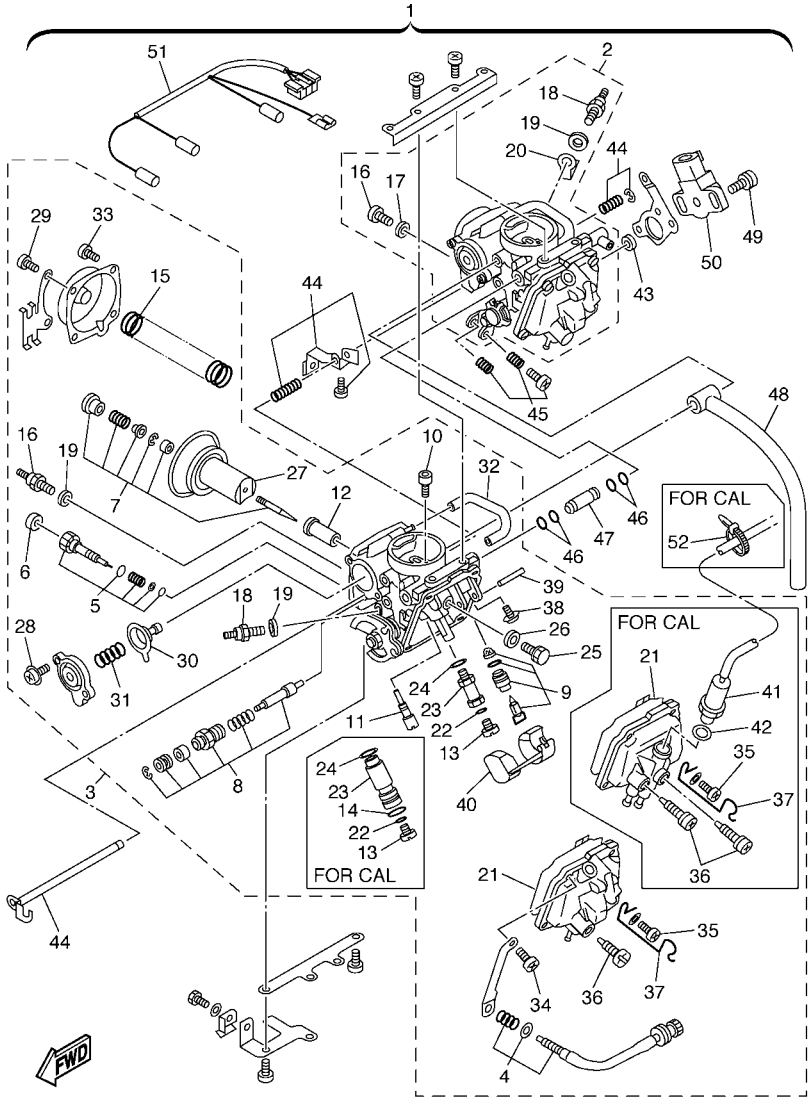

5FBN110-C080

FIG. 8 CARBURETOR

REF. NO.	PART NO.	DESCRIPTION	5FBS	5FBT	5FBU			REMARKS
21	1HX–14147–00	..O-RING	1	1	1			
22	1AE–14227–00	..O-RING	1	1	1			
23	1AE–14261–00	..HOLDER	1		1			
	5SC–14261–00	..HOLDER		1				
24	1AE–14237–00	..GASKET	1	1	1			
25	1HX–14565–00	..SCREW	1	1	1			
26	137–14153–00	..WASHER, MAIN JET	1	1	1			
27	4TR–14940–00	..DIAPHRAGM ASSY	1	1	1			
28	1UY–14565–00	..SCREW	2	2	2			
29	3KW–14486–00	..SCREW, ROD	2	2	2			(#2) FRONT
30	22V–14940–00	..DIAPHRAGM ASSY	1	1	1			
31	26H–14275–00	..SPRING	1		1			
	5SC–14275–00	..SPRING		1				
32	4TR–14348–00	..PIPE 1	1	1	1			
33	98507–04008	..SCREW, PAN HEAD	4	4	4			UR (#1) REAR
	98507–04008	..SCREW, PAN HEAD	2	2	2			UR (#2) FRONT
34	98707–04014	..SCREW, FLAT HEAD	4	4	4			UR (#1) REAR
	98707–04014	..SCREW, FLAT HEAD	3	3	3			UR (#2) FRONT
35	4VR–24453–00	..SCREW	1	1	1			(#2) FRONT
36	12R–14191–00	..PLUG, DRAIN	1		1			
	5LW–14191–00	..PLUG, DRAIN		2				
37	4TR–14937–00	..CLIP	1	1	1			(#2) FRONT
38	1FN–14565–00	..SCREW	1	1	1			
39	353–14186–00	..PIN, FLOAT	1	1	1			
40	1HX–14985–00	..FLOAT	1	1	1			
41	5SC–1410H–10	..FUEL CUT SOLENOID VALVE		1				UR (#1) REAR
	5SC–1410H–00	..FUEL CUT SOLENOID VALVE		1				UR (#2) FRONT

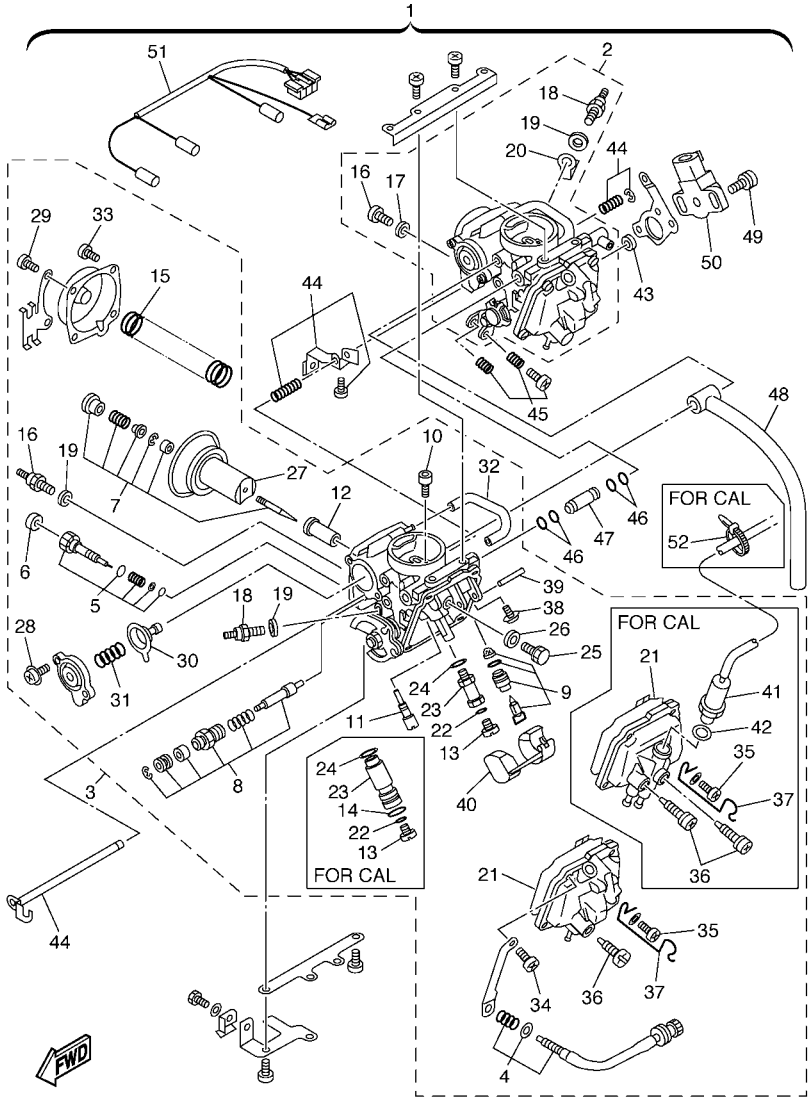

5FBN110-C080

FIG. 8 CARBURETOR

REF. NO.	PART NO.	DESCRIPTION	5FBS	5FBT	5FBU			REMARKS
42	256–14956–01	..WASHER		1				
43	4HM–14239–00	.SEAL	1	1	1			
44	4TR–1490L–00	.STARTER LEVER SET, 1	1	1	1			
45	3KW–1490K–00	.STOP SCREW SET	1	1	1			
46	36Y–14147–00	.O-RING	4	4	4			
47	1WG–14251–00	.NIPPLE	1	1	1			
48	4TR–14987–00	.HOSE	1	1	1			
49	4KM–24453–00	.SCREW	2	2	2			
50	4NK–85885–00	.THROTTLE POSITION SENSOR ASSY	1	1	1			
51	5SC–81517–00	.WIRE, SUB LEAD	1	1	1			
52	35H–14139–00	.CLIP, PIPE		1				

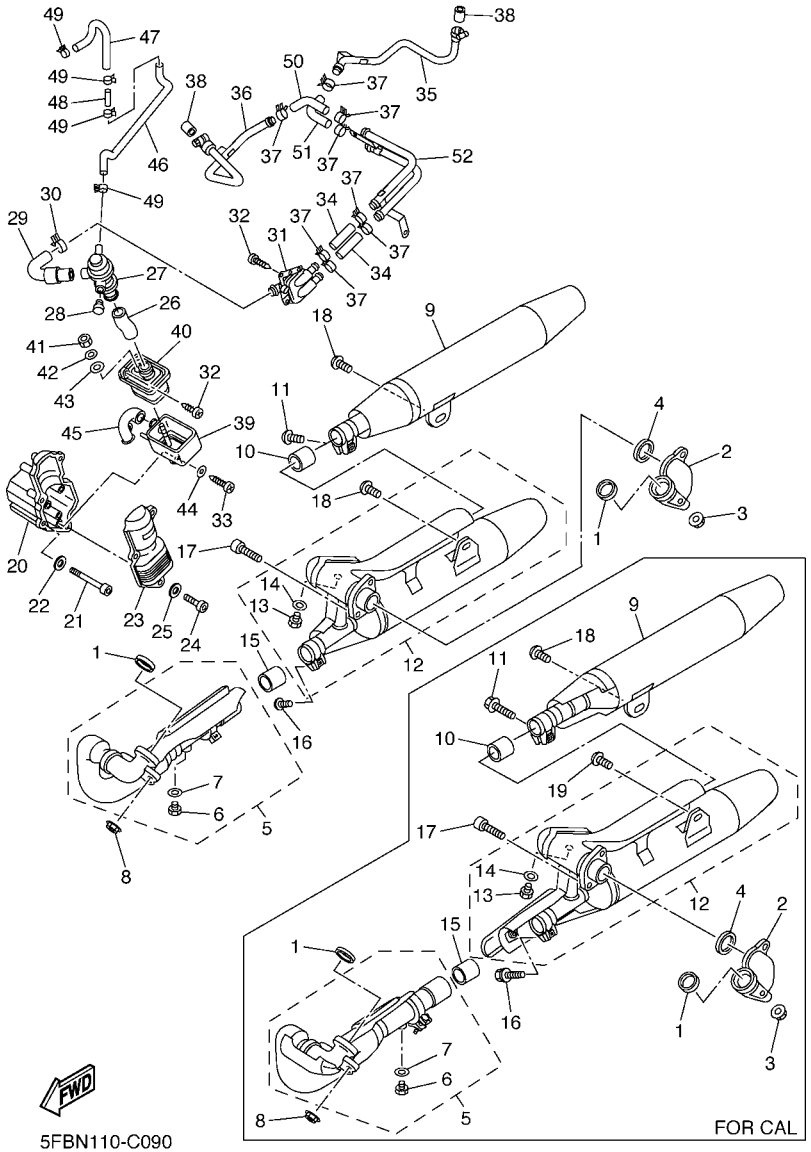

5FBN110-C090

FIG. 9 EXHAUST

REF. NO.	PART NO.	DESCRIPTION	5FBS	5FBT	5FBU			REMARKS
1	4TR–14613–00	GASKET, EXHAUST PIPE	2	2	2			
2	4TR–14615–02	JOINT, EXHAUST 1	1	1	1			
3	90185–08097	NUT, SELF-LOCKING	2	2	2			
4	4BR–14613–00	GASKET, EXHAUST PIPE	1	1	1			
5	4XP–14620–01	EXHAUST PIPE ASSY 2	1		1			
	5SC–14620–00	EXHAUST PIPE ASSY 2		1				
6	90101–06576	.BOLT	1	1	1			
7	92990–06600	.WASHER, PLATE	1	1	1			
8	90185–08097	NUT, SELF-LOCKING	2	2	2			
9	5BN–14703–01	MUFFLER COMP. 1	1		1			
	5SC–14703–10	MUFFLER COMP. 1		1				
10	4BH–14714–00	GASKET, MUFFLER	1	1	1			
11	92017–08025	BOLT, BUTTON HEAD	1		1			
	95024–08025	BOLT, FLANGE		1				
12	5BN–14704–01	MUFFLER COMP. 2	1		1			
	5SC–14704–10	MUFFLER COMP. 2		1				
13	90101–06576	.BOLT	1	1	1			
14	92990–06600	.WASHER, PLATE	1	1	1			
15	4BH–14714–00	GASKET, MUFFLER	1	1	1			
16	92017–08025	BOLT, BUTTON HEAD	1		1			
	95024–08025	BOLT, FLANGE		1				
17	90110–08036	BOLT, HEXAGON SOCKET HEAD	2	2	2			
18	92017–10020	BOLT, BUTTON HEAD	2		2			
	92017–10020	BOLT, BUTTON HEAD		1				
19	92017–10016	BOLT, BUTTON HEAD		1				
20	5BN–14604–00	COVER, AIR 1	1	1	1			
21	90110–06059	BOLT, HEXAGON SOCKET HEAD	3	3	3			

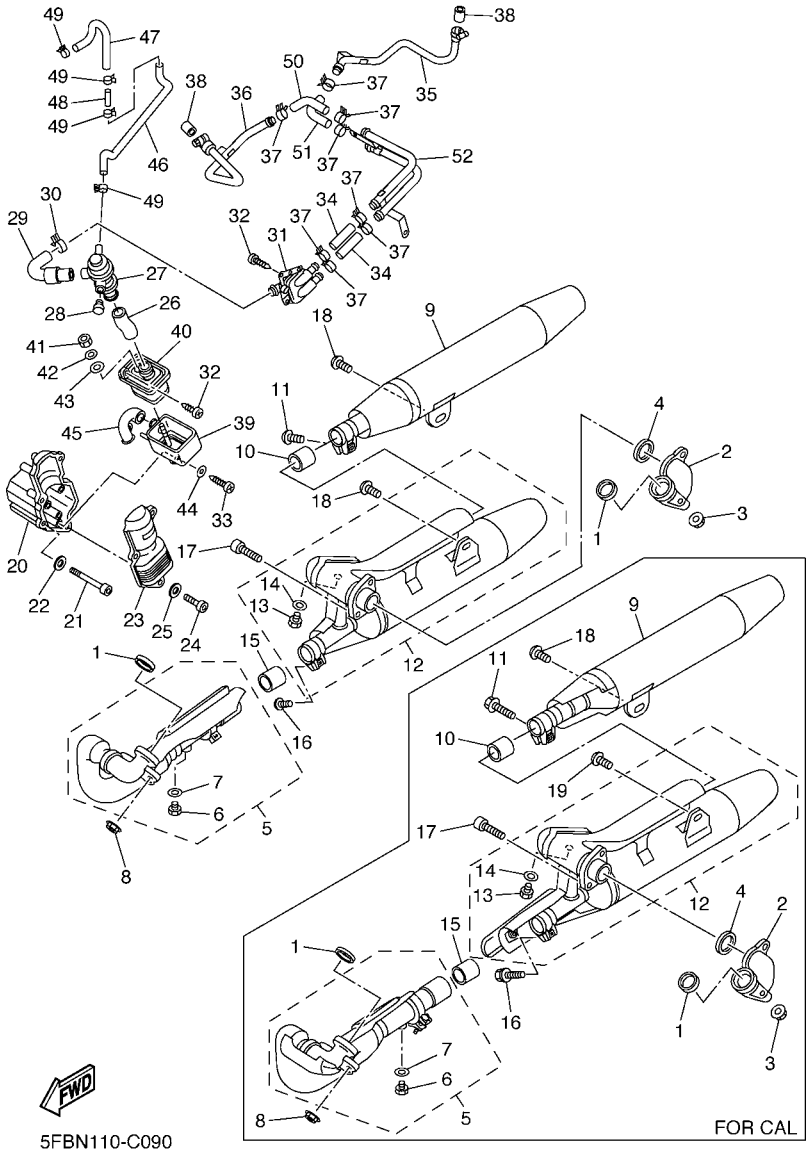

5FBN110-C090

FIG. 9 EXHAUST

REF. NO.	PART NO.	DESCRIPTION	5FBS	5FBT	5FBU			REMARKS
22	92907–06600	WASHER, PLATE	3	3	3			
23	5BN–14603–00	COVER 1	1	1	1			
24	91314–06020	BOLT	3	3	3			
25	92907–06200	WASHER	3	3	3			
26	5BN–14882–00	HOSE, BEND 2	1	1	1			
27	5BN–14840–00	AIR CUT VALVE ASS'Y	1	1	1			
28	90338–10132	PLUG	1	1	1			
29	5BN–14883–00	HOSE, BEND 3	1	1	1			
30	90467–19065	CLIP	1	1	1			
31	5BN–14808–00	REED VALVE ASSY	1	1	1			
32	97707–60114	SCREW, TAPPING	4	4	4			
33	97707–60120	SCREW, TAPPING	1	1	1			
34	5BN–14884–00	HOSE, BEND 4	2	2	2			
35	5BN–14871–00	PIPE 1	1	1	1			
36	5BN–14872–00	PIPE 2	1	1	1			
37	90468–08104	CLIP	8	8	8			
38	42H–14714–10	GASKET, MUFFLER	2	2	2			
39	5BN–14857–01	CASE, AIR CLEANER	1	1	1			
40	5BN–14858–00	CAP, CASE	1	1	1			
41	95607–05100	NUT, U	1	1	1			
42	92907–05200	WASHER	1	1	1			
43	90202–05057	WASHER, PLATE	1	1	1			
44	90201–062P7	WASHER, PLATE	1	1	1			
45	5BN–14885–00	HOSE, BEND 5	1	1	1			
46	5BN–13542–00	HOSE, VACUUM SENSING 1	1	1	1			
47	5BN–13544–00	HOSE, VACUUM SENSING 2	1	1	1			
48	4MM–13582–00	PIPE	1	1	1			

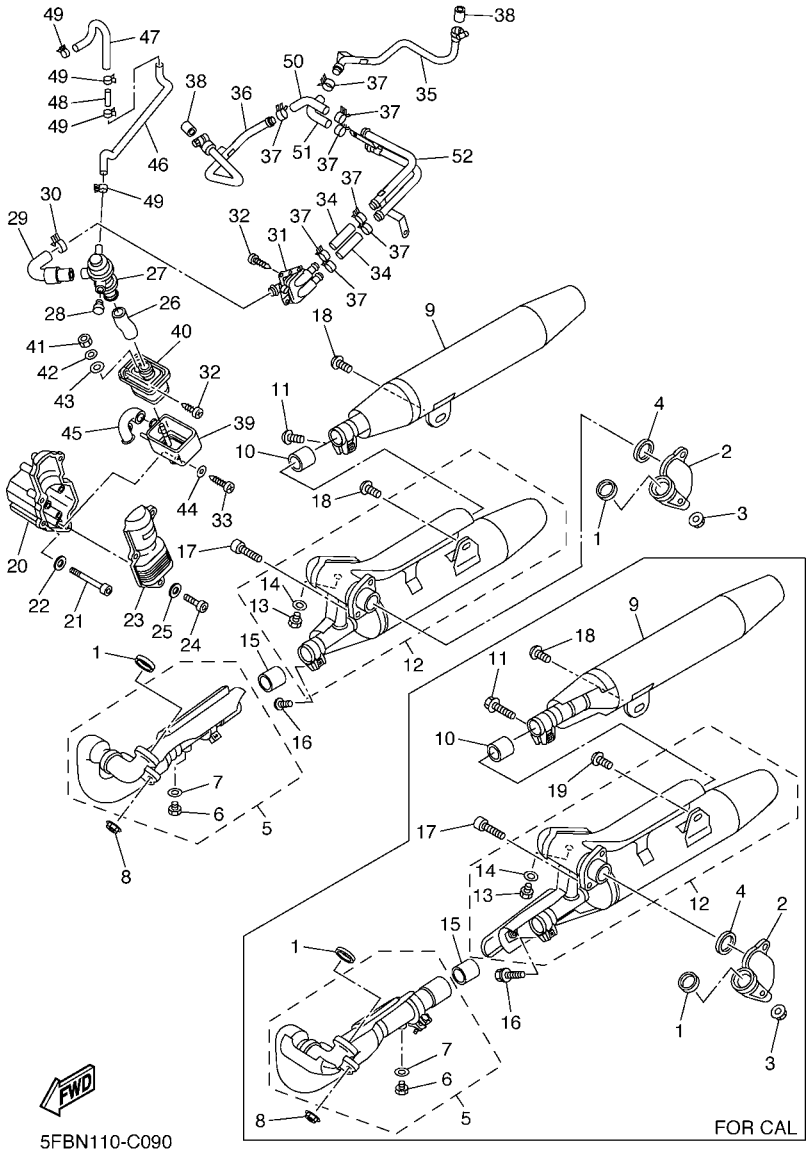

FIG. 9 EXHAUST

REF. NO.	PART NO.	DESCRIPTION	5FBS	5FBT	5FBU			REMARKS
49	90467–08092	CLIP	4	4	4			
50	5BN–14881–00	HOSE, BEND 1	1	1	1			
51	5BN–14881–10	HOSE, BEND 1	1	1	1			
52	5BN–14875–00	PIPE 5	1	1	1			

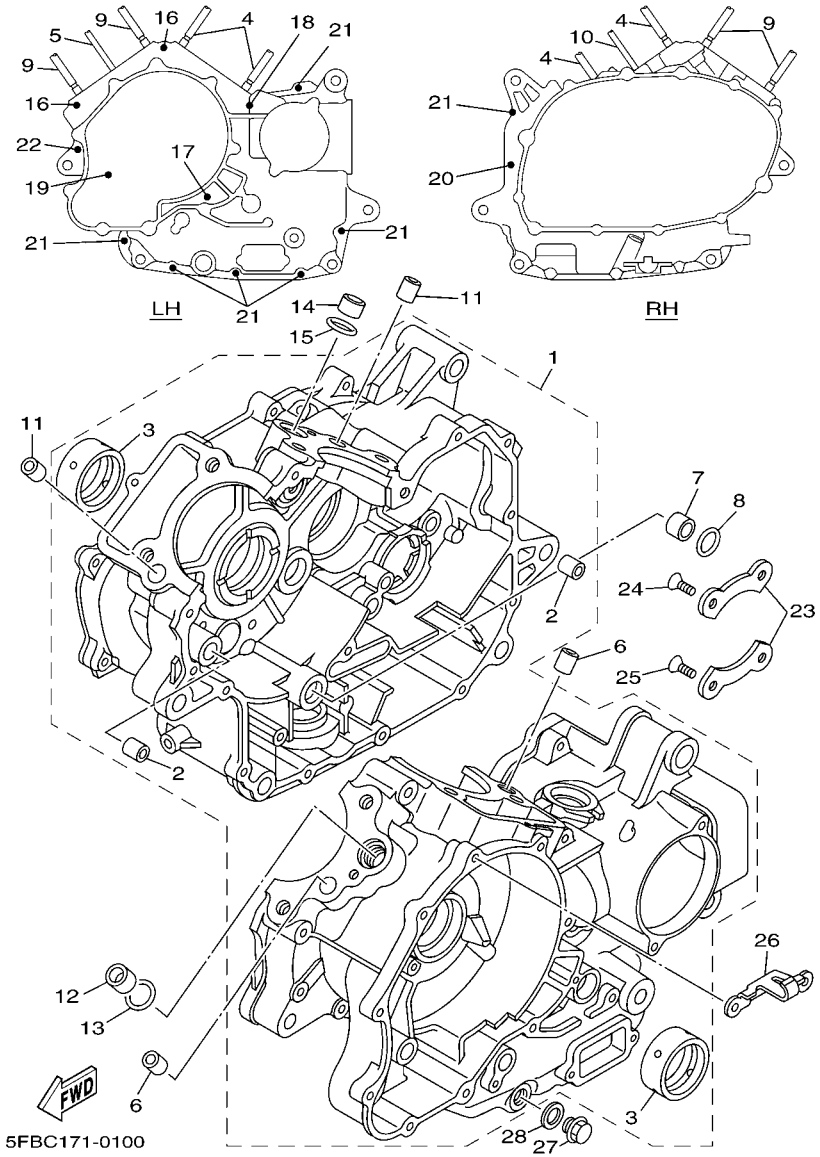

FIG. 10 CRANKCASE

REF. NO.	PART NO.	DESCRIPTION	5FBS	5FBT	5FBU			REMARKS
1	4TR–15100–20	CRANKCASE ASSY	1	1	1			
2	91815–16017	.PIN, DOWEL	2	2	2			
3	22U–11416–80	.PLANE BEARING, CRANKSHAFT 1	2	2	2			UR BLUE
	22U–11416–90	.PLANE BEARING, CRANKSHAFT 1	2	2	2			UR GREEN
4	90116–10611	BOLT, STUD	4	4	4			
5	90116–08404	BOLT, STUD	1	1	1			
6	99530–14016	PIN, DOWEL	2	2	2			
7	90387–16547	COLLAR	1	1	1			
8	93210–18322	O-RING	1	1	1			
9	90116–10405	BOLT, STUD	4	4	4			
10	90116–08404	BOLT, STUD	1	1	1			
11	99530–14016	PIN, DOWEL	2	2	2			
12	90387–16547	COLLAR	1	1	1			
13	93210–18322	O-RING	1	1	1			
14	90387–16547	COLLAR	1	1	1			
15	93210–18322	O-RING	1	1	1			
16	91314–08060	BOLT	2	2	2			
17	91317–08080	BOLT	1	1	1			
18	91314–08100	BOLT	1	1	1			
19	91317–06095	BOLT	1	1	1			
20	91380–06045	BOLT	1	1	1			
21	91317–06045	BOLT	7	7	7			
22	91314–06055	BOLT	1	1	1			
23	11H–15383–02	PLATE, BEARING COVER	2	2	2			
24	90151–08022	SCREW, COUNTERSUNK	1	1	1			
25	90149–08152	SCREW	3	3	3			
26	22U–15441–01	HOLDER, CLUTCH CABLE	1	1	1			

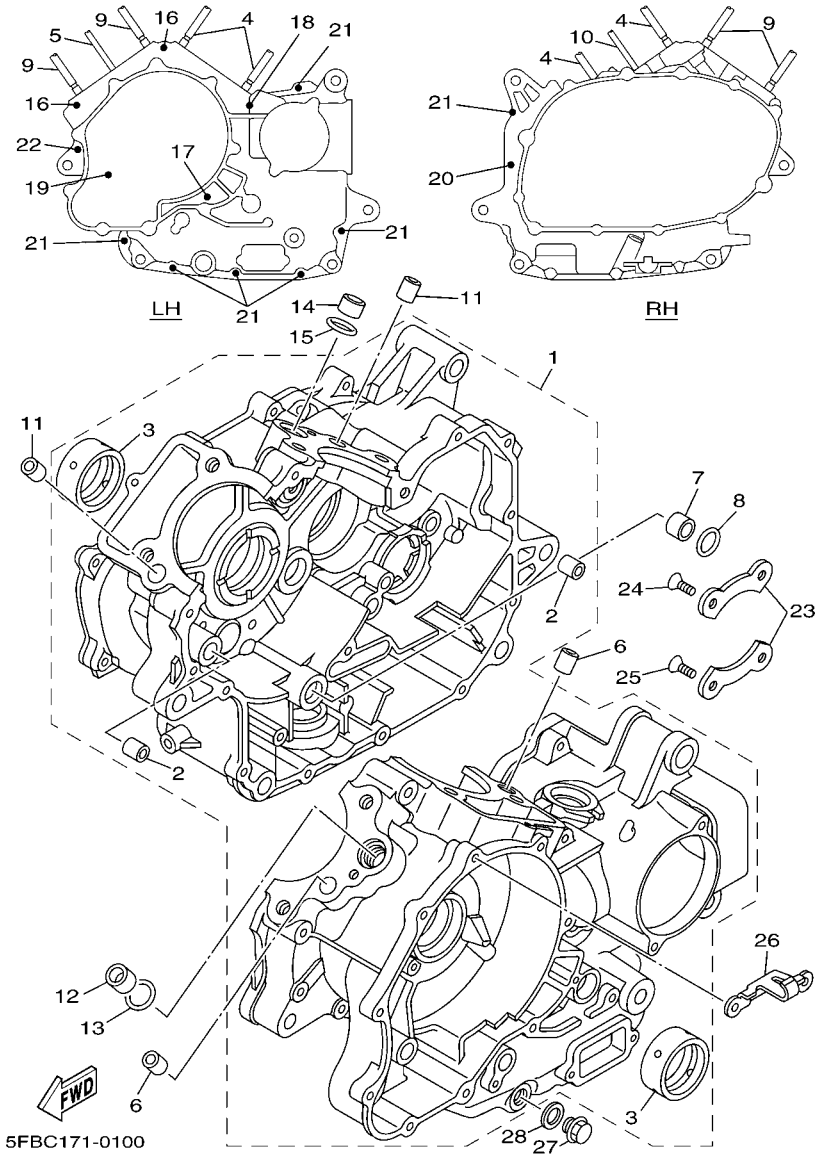

FIG. 10 CRANKCASE

REF. NO.	PART NO.	DESCRIPTION	5FBS	5FBT	5FBU			REMARKS
27	90340–14132	PLUG, STRAIGHT SCREW	1	1	1			
28	214–11198–01	GASKET	1	1	1			

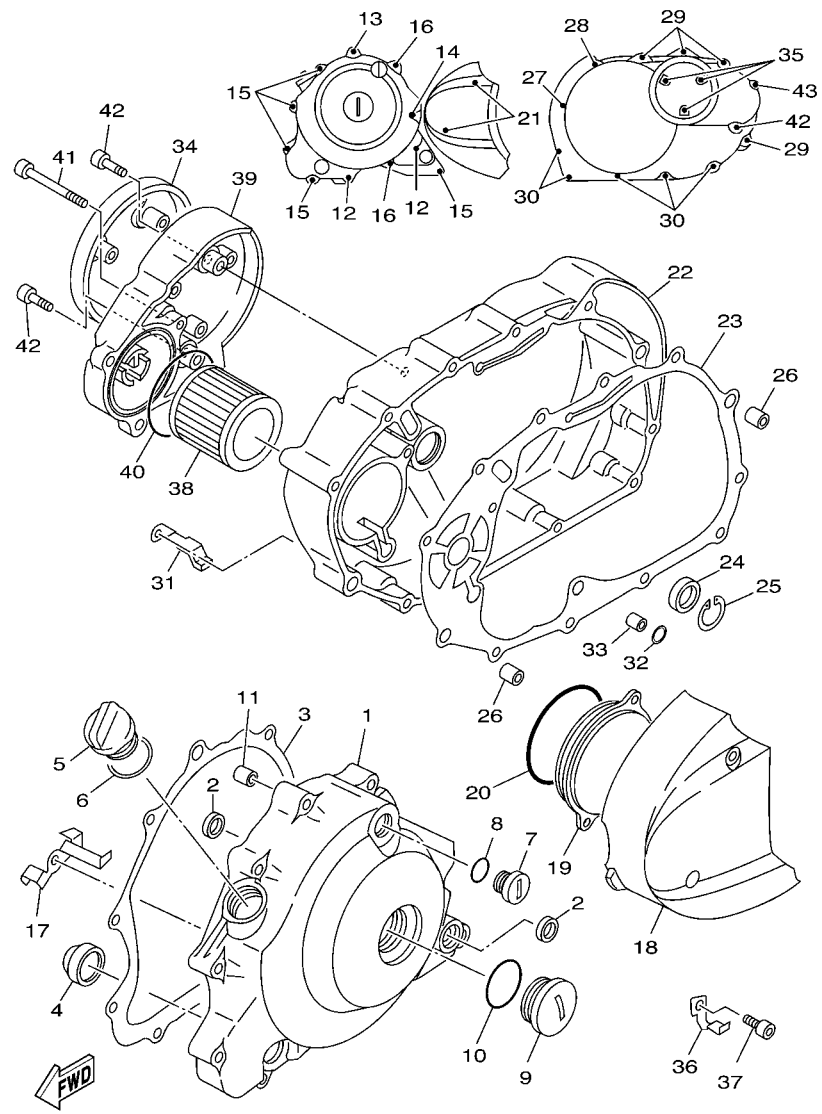

FIG. 11 CRANKCASE COVER 1

REF. NO.	PART NO.	DESCRIPTION	5FBS	5FBT	5FBU			REMARKS
1	4TR–15411–20	COVER, CRANKCASE 1	1	1	1			
2	93109–12075	OIL SEAL	2	2	2			
3	4VR–15451–00	GASKET, CRANKCASE COVER 1	1	1	1			
4	2H7–15361–00	GAUGE, LEVEL	1	1	1			
5	3F9–15362–00	PLUG, OIL LEVEL	1	1	1			
6	93210–27370	O-RING	1	1	1			
7	90340–14117	PLUG, STRAIGHT SCREW	1	1	1			
8	93210–14369	O-RING	1	1	1			
9	90340–32001	PLUG, STRAIGHT SCREW	1	1	1			
10	93210–32172	O-RING	1	1	1			
11	99530–10114	PIN, DOWEL	2	2	2			
12	91314–06040	BOLT	2	2	2			
13	91314–06045	BOLT	1	1	1			
14	91314–06055	BOLT	1	1	1			
15	91314–06030	BOLT	5	5	5			
16	91314–06035	BOLT	2	2	2			
17	3BT–15484–00	CLAMP 2	1	1	1			
18	4TR–15415–20	COVER, GENERATOR	1	1	1			
19	4TR–15424–00	COVER 2	1	1	1			
20	93210–74316	O-RING	1	1	1			
21	91314–06025	BOLT	2	2	2			
22	4TR–15421–20	COVER, CRANKCASE 2	1	1	1			
23	4VR–15461–00	GASKET, CRANKCASE COVER 2	1	1	1			
24	93101–14089	OIL SEAL	1	1	1			
25	99009–25500	CIRCLIP	1	1	1			
26	99530–10120	PIN, DOWEL	2	2	2			
27	91314–06065	BOLT	1	1	1			

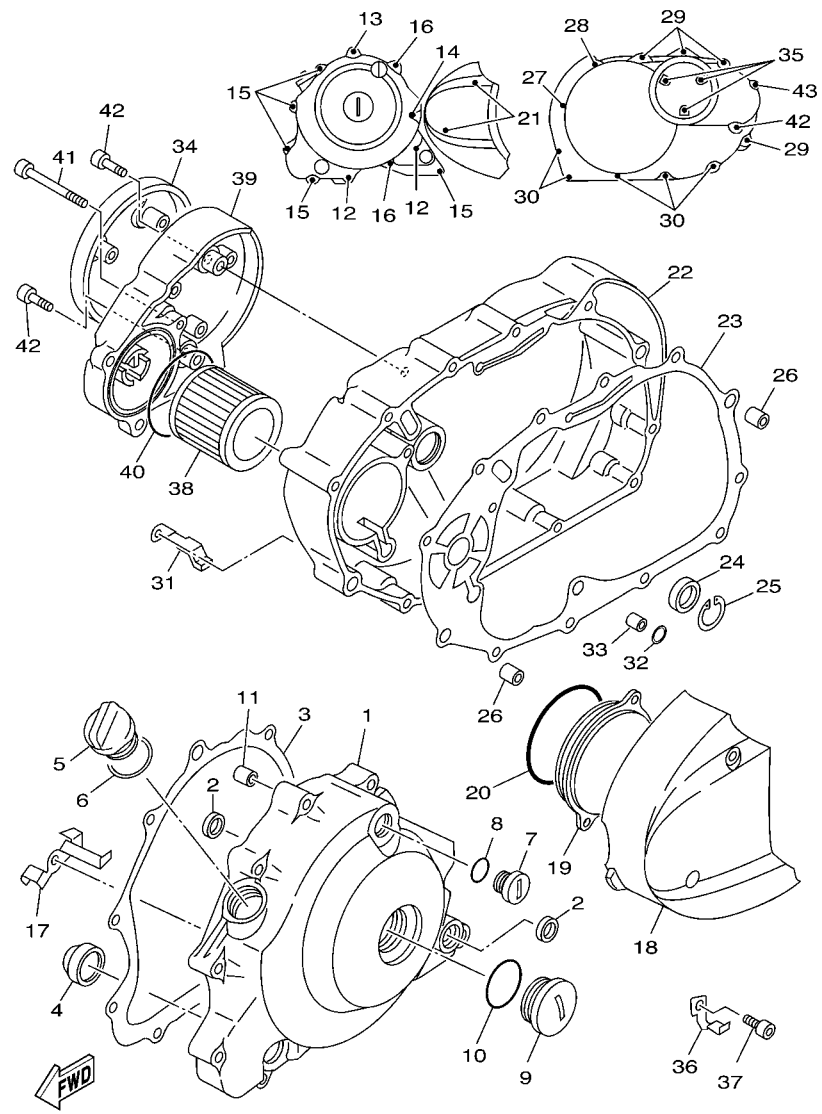

FIG. 11 CRANKCASE COVER 1

REF. NO.	PART NO.	DESCRIPTION	5FBS	5FBT	5FBU			REMARKS
28	91314–06055	BOLT	1	1	1			
29	91314–06045	BOLT	4	4	4			
30	91314–06030	BOLT	5	5	5			
31	90462–10115	CLAMP	4	4	4			
32	93210–15566	O-RING	1	1	1			
33	91815–16017	PIN, DOWEL	1	1	1			
34	4TR–15423–20	COVER 2	1	1	1			
35	92014–06035	BOLT, BUTTON HEAD	3	3	3			
36	90462–08070	CLAMP	1	1	1			
37	91317–06012	BOLT	1	1	1			
38	4X7–13440–01	ELEMENT ASSY, OIL CLEANER	1	1	1			
39	4TR–13447–20	COVER, OIL ELEMENT	1	1	1			
40	93210–64297	O-RING	1	1	1			
41	90110–06010	BOLT, HEXAGON SOCKET HEAD	1	1	1			
42	91314–06025	BOLT	3	3	3			
43	91314–06070	BOLT	1	1	1			

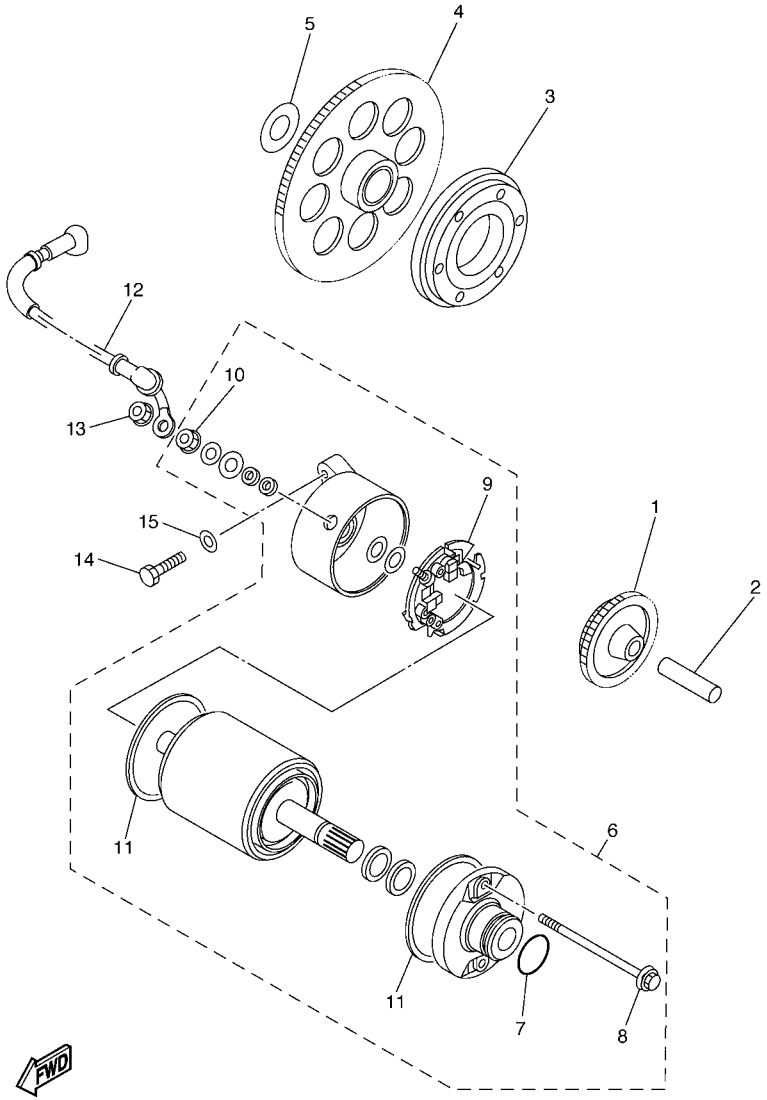

4XSA700-C120

FIG. 12 STARTER CLUTCH

REF. NO.	PART NO.	DESCRIPTION	5FBS	5FBT	5FBU			REMARKS
1	22U–15512–00	GEAR, IDLER 1 (12T/50T)	1	1	1			
2	5H0–15521–00	SHAFT 1	1	1	1			
3	4TR–15590–00	STARTER ONE-WAY ASSY	1	1	1			
4	4VR–15517–01	GEAR, IDLER 2 (66T)	1	1	1			
5	90201–25290	WASHER, PLATE	1	1	1			
6	3JB–81890–00	MOTOR ASSY	1	1	1			
7	1FK–81847–00	.O-RING	1	1	1			
8	3HE–81826–00	.BOLT	2	2	2			
9	3KS–81840–00	.BRUSH HOLDER ASSY	1	1	1			
10	4XV–8182A–00	.NUT	1	1	1			
11	11H–81844–00	.GASKET	2	2	2			
12	4VR–81815–00	CORD, STARTER MOTOR	1	1	1			
13	4XV–8182A–00	NUT	1	1	1			
14	97070–06025	BOLT	2	2	2			
15	92990–06600	WASHER, PLATE	2	2	2			

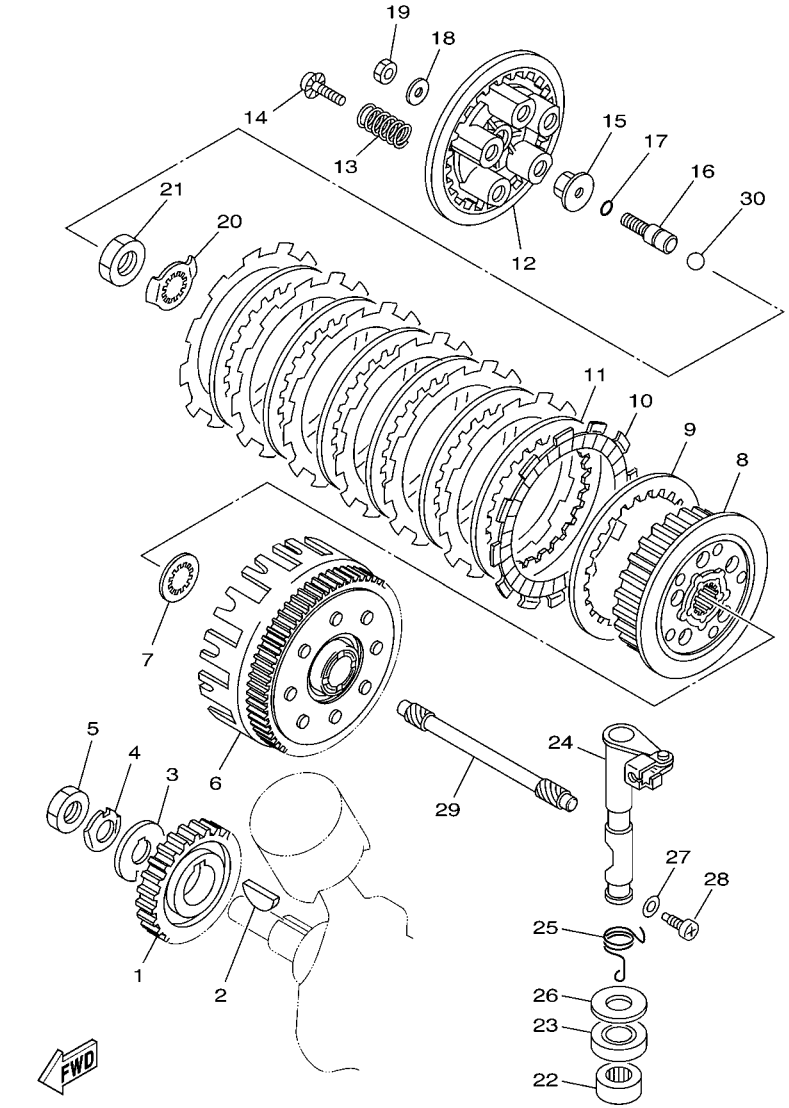

4VR1300-7130

FIG. 13 CLUTCH

REF. NO.	PART NO.	DESCRIPTION	5FBS	5FBT	5FBU			REMARKS
1	4VR–16111–00	GEAR, PRIMARY DRIVE (38T)	1	1	1			
2	90280–07036	KEY, WOODRUFF	1	1	1			
3	90214–16026	WASHER, CLAW	1	1	1			
4	90215–16157	WASHER, LOCK	1	1	1			
5	90170–16256	NUT	1	1	1			
6	5BN–16150–00	PRIMARY DRIVEN GEAR COMP.	1	1	1			
7	22U–16154–00	PLATE, THRUST 1	1	1	1			
8	4VR–16371–00	BOSS, CLUTCH	1	1	1			
9	4X7–16324–00	PLATE, CLUTCH 1	1	1	1			
10	22U–16321–00	PLATE, FRICTION	7	7	7			
11	4X7–16325–00	PLATE, CLUTCH 2	6	6	6			
12	22U–16351–00	PLATE, PRESSURE 1	1	1	1			
13	90501–23738	SPRING, COMPRESSION	5	5	5			
14	90159–06016	SCREW, WITH WASHER	5	5	5			
15	1W1–16358–01	PLATE, PUSH	1	1	1			
16	4VR–16356–00	ROD, PUSH 1	1	1	1			
17	93210–09525	O-RING	1	1	1			
18	92907–06200	WASHER	1	1	1			
19	95307–06600	NUT	1	1	1			
20	90215–22210	WASHER, LOCK	1	1	1			
21	90170–20310	NUT	1	1	1			
22	93315–21813	BEARING	1	1	1			
23	93102–18278	OIL SEAL	1	1	1			
24	22U–16380–00	PUSH LEVER ASSY	1	1	1			
25	90508–16577	SPRING, TORSION	1	1	1			
26	90201–18262	WASHER, PLATE	1	1	1			
27	90430–08119	GASKET	1	1	1			

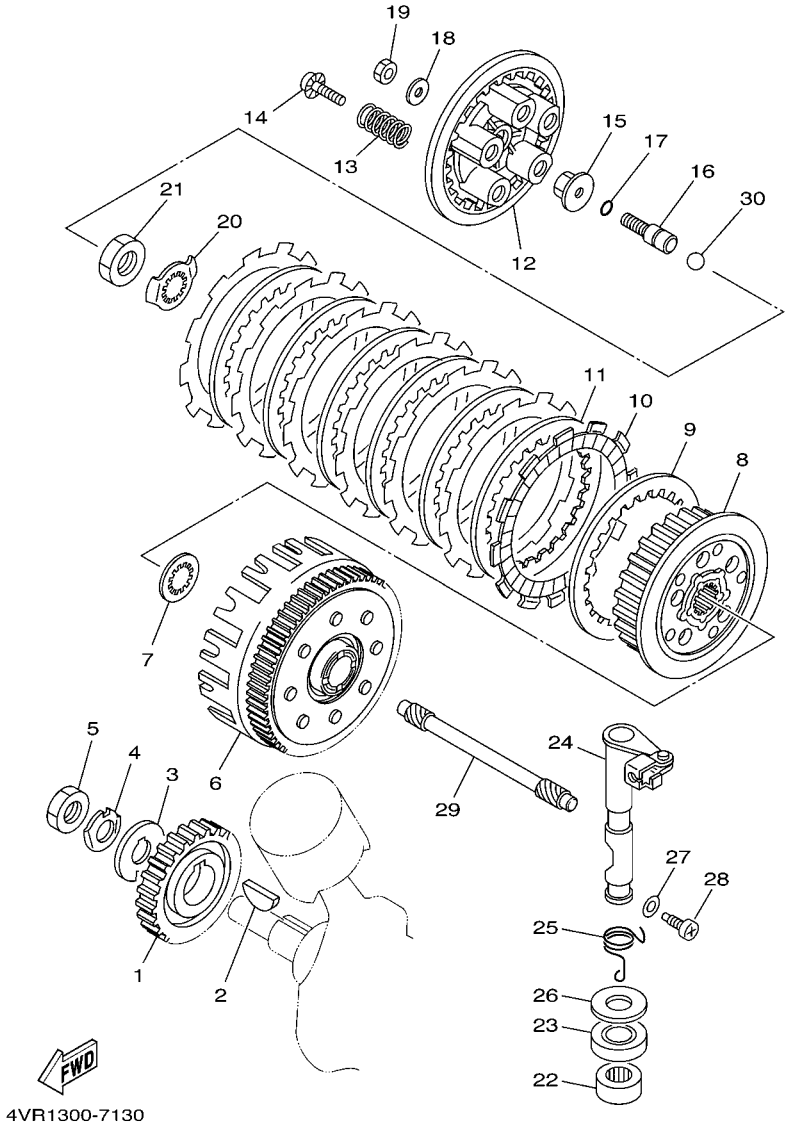

FIG. 13 CLUTCH

REF. NO.	PART NO.	DESCRIPTION	5FBS	5FBT	5FBU			REMARKS
28	90149–08067	SCREW	1	1	1			
29	22U–16357–00	ROD, PUSH 2	1	1	1			
30	93515–32029	BALL	1	1	1			

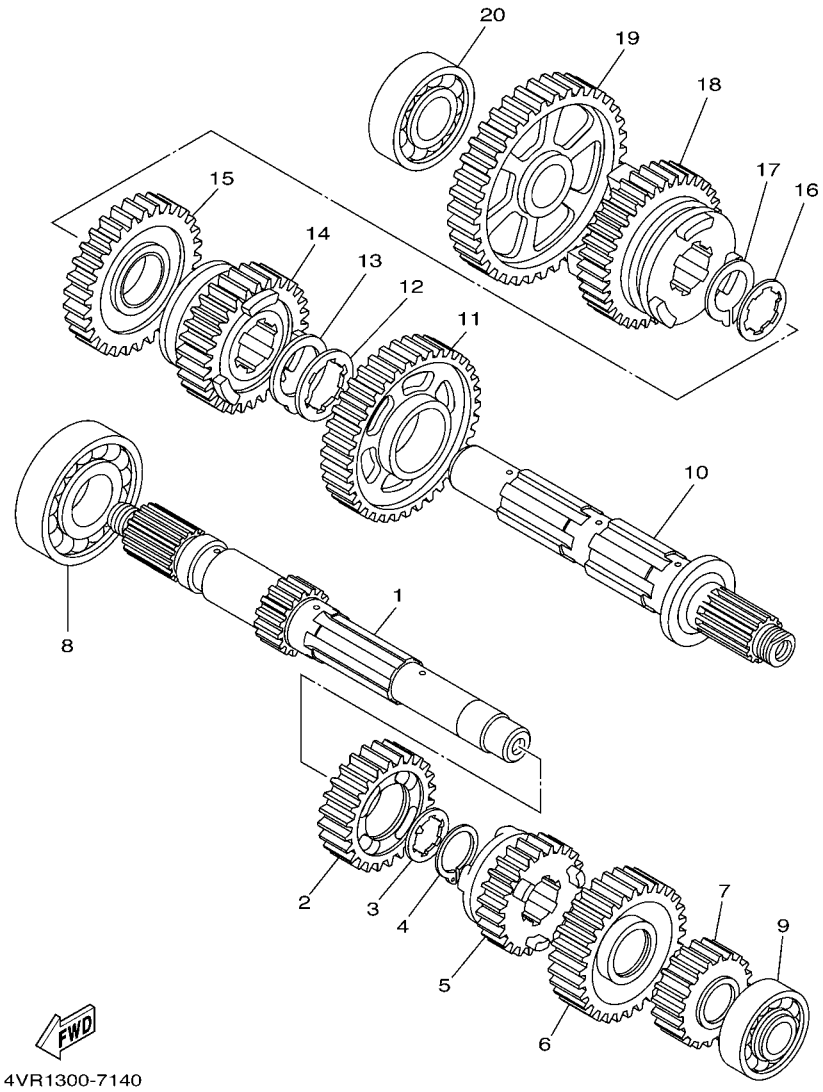

FIG. 14 TRANSMISSION

REF. NO.	PART NO.	DESCRIPTION	5FBS	5FBT	5FBU			REMARKS
1	4VR–17411–00	AXLE, MAIN (14T)	1	1	1			
2	3JB–17141–00	GEAR, 4TH PINION (24T)	1	1	1			
3	90209–22191	WASHER	1	1	1			
4	93440–25084	CIRCLIP	1	1	1			
5	4VR–17131–00	GEAR, 3RD PINION (24T)	1	1	1			
6	4VR–17151–01	GEAR, 5TH PINION (30T)	1	1	1			
7	4KU–17121–00	GEAR, 2ND PINION (20T)	1	1	1			
8	93306–30525	BEARING (B6305)	1	1	1			
9	93306–00401	BEARING (B6004)	1	1	1			
10	22U–17402–00	DRIVE AXLE ASSY	1	1	1			
11	4KU–17221–00	GEAR, 2ND WHEEL (38T)	1	1	1			
12	90209–27192	WASHER	1	1	1			
13	93440–30077	CIRCLIP	1	1	1			
14	4VR–17251–01	GEAR, 5TH WHEEL (29T)	1	1	1			
15	4VR–17231–00	GEAR, 3RD WHEEL (35T)	1	1	1			
16	90209–22191	WASHER	1	1	1			
17	93440–25084	CIRCLIP	1	1	1			
18	4TR–17241–00	GEAR, 4TH WHEEL (28T)	1	1	1			
19	22U–17211–00	GEAR, 1ST WHEEL (38T)	1	1	1			
20	93306–00428	BEARING	1	1	1			

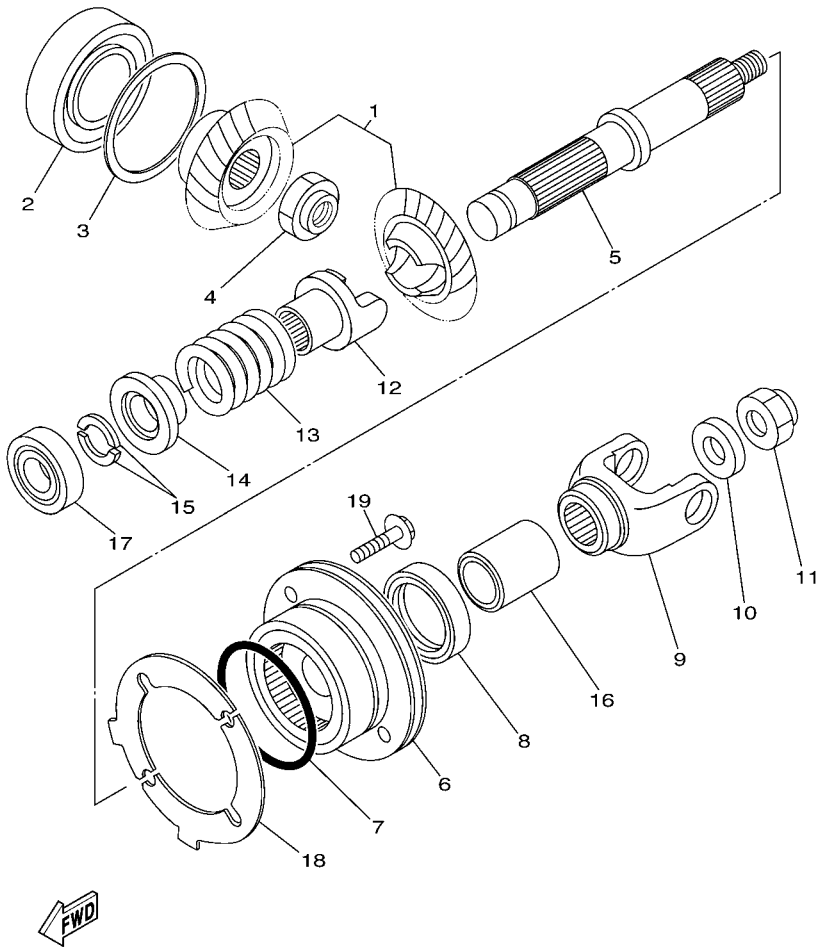

FIG. 15 MIDDLE DRIVE GEAR

REF. NO.	PART NO.	DESCRIPTION	5FBS	5FBT	5FBU			REMARKS
1	4VR–Y1754–00	MIDDLE GEAR COMP.	1	1	1			
2	93306–20711	BEARING	1	1	1			
3	4H7–17537–00–20	SHIM, THRUST (0.20T)	1	1	1			UR
	4H7–17537–00–30	SHIM, THRUST (0.30T)	1	1	1			UR
	4H7–17537–00–40	SHIM, THRUST (0.40T)	1	1	1			UR
4	90179–18396	NUT	1	1	1			
5	4VR–17553–00	SHAFT, MIDDLE DRIVEN	1	1	1			
6	4VR–W1752–00	HOUSHING COMP.	1	1	1			
7	93210–71360	O-RING	1	1	1			
8	93101–35097	OIL SEAL	1	1	1			
9	22U–17556–00	YOKE, JOINT	1	1	1			
10	90201–14633	WASHER, PLATE	1	1	1			
11	90185–14070	NUT, SELF-LOCKING	1	1	1			
12	4VR–17527–00	CAM, DRIVEN	1	1	1			
13	90501–60716	SPRING, COMPRESSION	1	1	1			
14	22U–17524–00	HOLDER	1	1	1			
15	3H5–17529–00	WASHER, THRUST	2	2	2			
16	90387–2511R	COLLAR	1	1	1			
17	93306–00401	BEARING (B6004)	1	1	1			
18	3JB–17531–00	SHIM, PINION (0.10T)	2	2	2			UR
	3JB–17531–10	SHIM, PINION (0.15T)	2	2	2			UR
	3JB–17531–20	SHIM, PINION (0.20T)	2	2	2			UR
	3JB–17531–30	SHIM, PINION (0.30T)	2	2	2			UR
	3JB–17531–40	SHIM, PINION (0.40T)	2	2	2			UR
	3JB–17531–50	SHIM, PINION (0.50T)	2	2	2			UR
19	95827–08035	BOLT, FLANGE	4	4	4			

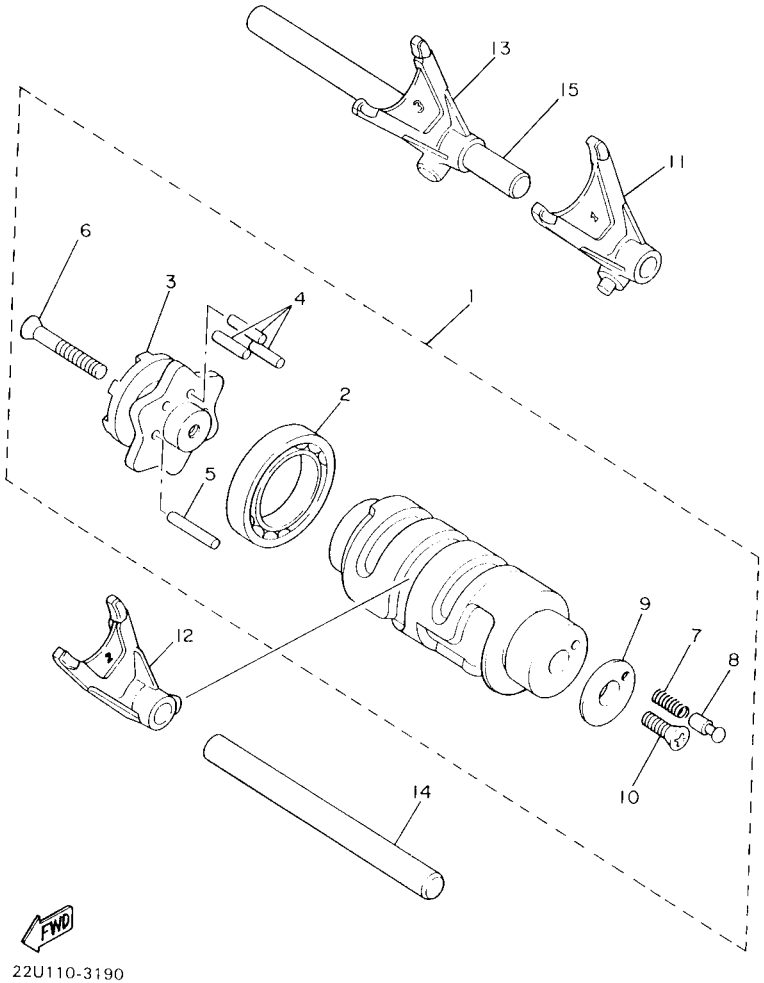

FIG. 16 SHIFT CAM & FORK

REF. NO.	PART NO.	DESCRIPTION	5FBS	5FBT	5FBU			REMARKS
1	4TR–18540–02	SHIFT CAM ASSY	1	1	1			
2	93306–90602	.BEARING	1	1	1			
3	4H7–18185–00	.SEGMENT	1	1	1			
4	93604–16092	.PIN, DOWEL	3	3	3			
5	93604–20156	.PIN, DOWEL	1	1	1			
6	98707–05035	.SCREW, FLAT HEAD	1	1	1			
7	90501–06022	.SPRING, COMPRESSION	1	1	1			
8	4UN–18542–00	.POINT, NEUTRAL	1	1	1			
9	4UN–18566–00	.PLATE, SIDE 2	1	1	1			
10	90149–05321	.SCREW	1	1	1			
11	4TR–18511–00	FORK, SHIFT 1	1	1	1			
12	4TR–18512–00	FORK, SHIFT 2	1	1	1			
13	4TR–18513–00	FORK, SHIFT 3	1	1	1			
14	3YF–18531–00	BAR, SHIFT FORK GUIDE 1	1	1	1			
15	4TR–18535–00	BAR, SHIFT FORK GUIDE 2	1	1	1			

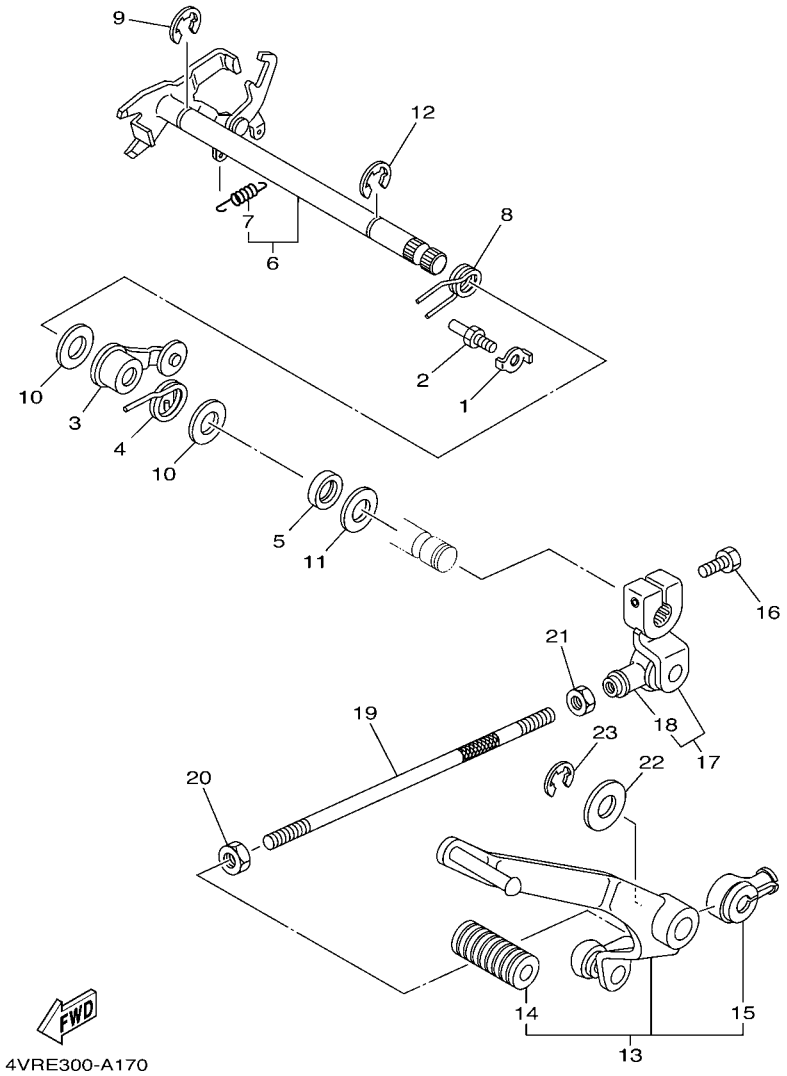

FIG. 17 SHIFT SHAFT

REF. NO.	PART NO.	DESCRIPTION	5FBS	5FBT	5FBU			REMARKS
1	90215–18178	WASHER, LOCK	1	1	1			
2	4G0–18127–00	STOPPER, SCREW	1	1	1			
3	4TR–18140–00	STOPPER LEVER ASSY	1	1	1			
4	90508–290B5	SPRING, TORSION	1	1	1			
5	93102–12106	OIL SEAL (SD 12-22-5 HS)	1	1	1			
6	4TR–18120–00	SHIFT LEVER ASSY	1	1	1			
7	90506–08227	.SPRING, TENSION	1	1	1			
8	90508–32536	SPRING, TORSION	1	1	1			
9	99001–10600	CIRCLIP	1	1	1			
10	90201–12588	WASHER, PLATE	2	2	2			
11	90201–12575	WASHER, PLATE	1	1	1			
12	99001–10600	CIRCLIP	1	1	1			
13	4TR–18110–00	SHIFT PEDAL ASSY	1	1	1			
14	22N–18113–00	.COVER, SHIFT PEDAL	1	1	1			
15	2H9–18154–00	.COVER, DUST	1	1	1			
16	97024–06020	BOLT	1	1	1			
17	4TR–18112–00	ARM, SHIFT	1	1	1			
18	2H9–18154–00	.COVER, DUST	1	1	1			
19	3SX–18115–01	ROD, SHIFT	1	1	1			
20	90170–06228	NUT(COUNTER CLOCKWISE)	1	1	1			
21	95304–06700	NUT	1	1	1			
22	90201–12362	WASHER, PLATE	1	1	1			
23	99009–12400	CIRCLIP	1	1	1			

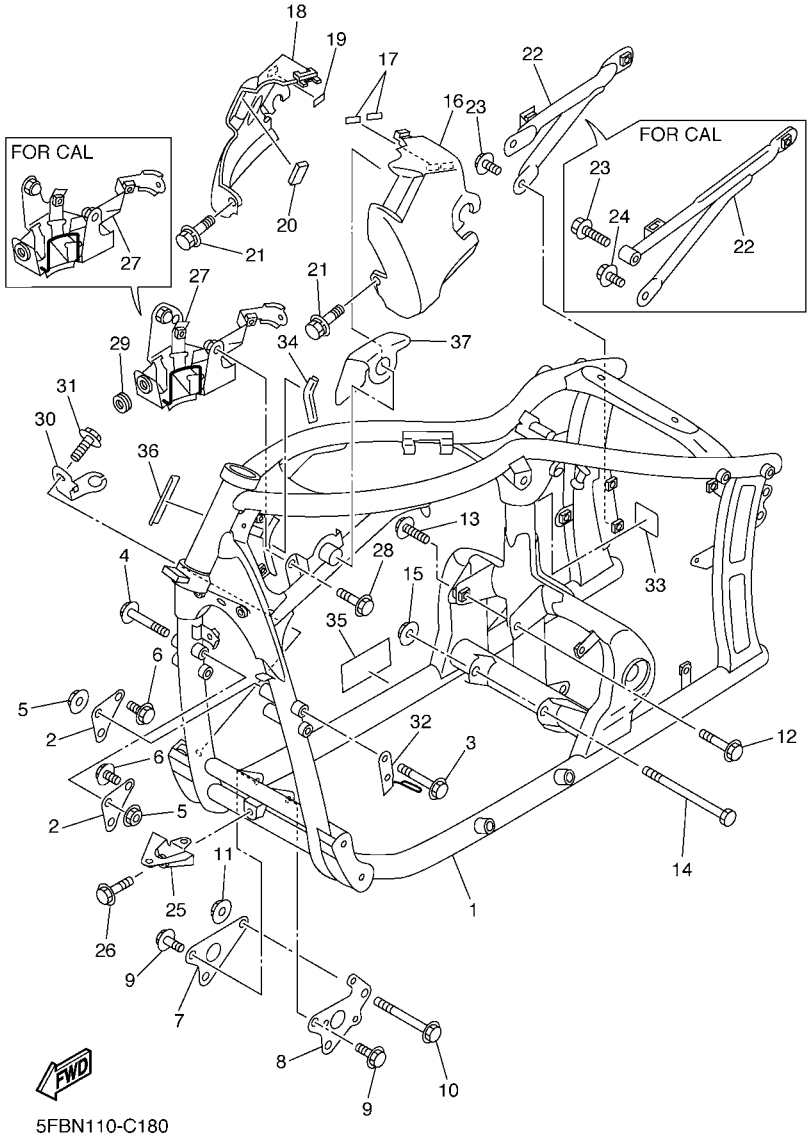

FIG. 18 FRAME

REF. NO.	PART NO.	DESCRIPTION	5FBS	5FBT	5FBU			REMARKS
1	4VR–21110–60	FRAME COMP.	1		1			
	4VR–21110–50	FRAME COMP.		1				
2	4VR–21315–00	STAY, ENGINE 2	2	2	2			
3	90105–082A4	BOLT, FLANGE	2	2	2			
4	90105–084A1	BOLT, FLANGE	2	2	2			
5	90179–08684	NUT	4	4	4			
6	95817–10025	BOLT, FLANGE	2	2	2			
7	4VR–21317–00	STAY, ENGINE 3	1	1	1			
8	5BN–21317–00	STAY, ENGINE 3	1	1	1			
9	90105–08307	BOLT, FLANGE	4	4	4			
10	95814–10100	BOLT, FLANGE	1	1	1			
11	90179–10658	NUT	1	1	1			
12	90105–10253	BOLT, FLANGE	1	1	1			
13	90105–10232	BOLT, FLANGE	1	1	1			
14	90101–12694	BOLT	1	1	1			
15	90179–12248	NUT	1	1	1			
16	4TR–2171E–20–P2	COVER, SIDE 5	1	1	1			MBL2
17	3BN–21747–00	DAMPER	2	2	2			
18	4TR–2171X–20–P2	COVER, SIDE 6	1	1	1			MBL2
19	3BN–21747–00	DAMPER	1	1	1			
20	4SV–28372–00	DAMPER	1	1	1			
21	90119–06236	BOLT, WITH WASHER	2	2	2			
22	4TR–21460–01	STAY, MUFFLER	1		1			
	4TR–21460–10	STAY, MUFFLER		1				
23	95817–08014	BOLT, FLANGE	2		2			
	95817–08045	BOLT, FLANGE		1				
24	95817–08020	BOLT, FLANGE		1				

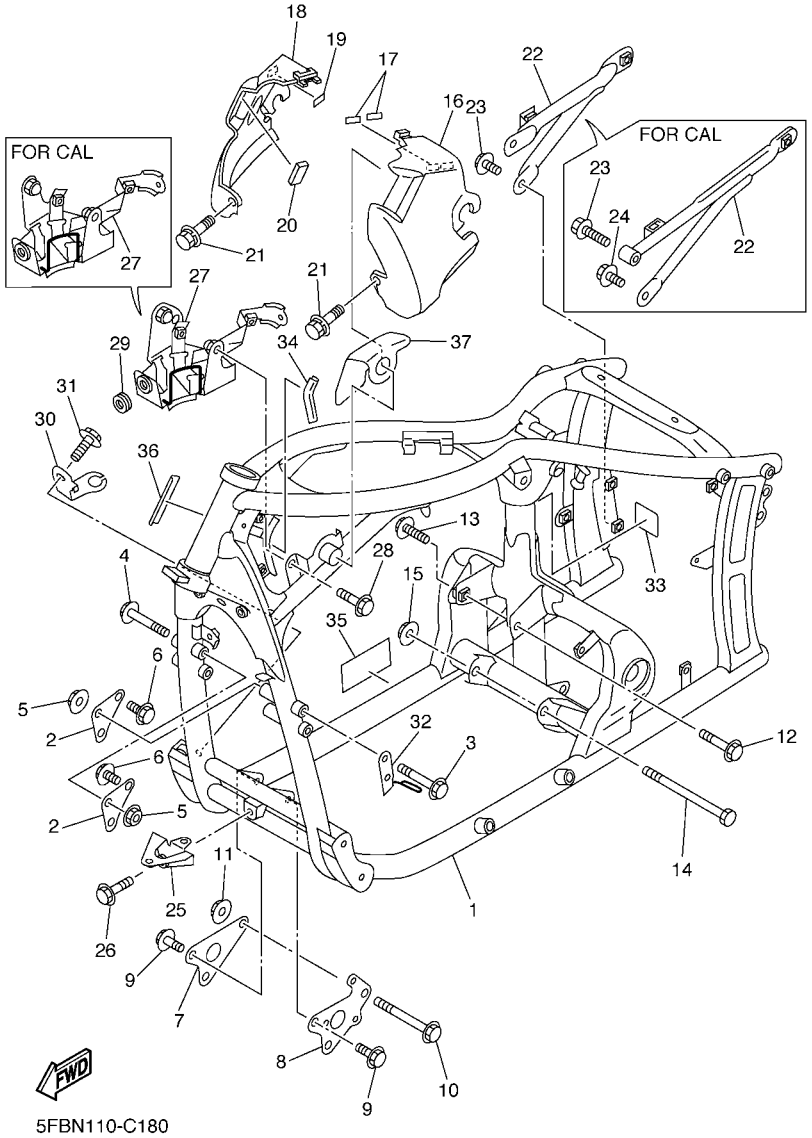

FIG. 18 FRAME

REF. NO.	PART NO.	DESCRIPTION	5FBS	5FBT	5FBU			REMARKS
25	4VR–28356–01	STAY 1	1	1	1			
26	90105–062A2	BOLT, FLANGE	1	1	1			
27	4TR–24491–02	BRACKET, FUEL PUMP	1		1			
	4TR–24491–10	BRACKET, FUEL PUMP		1				
28	95807–06014	BOLT, FLANGE	2	2	2			
29	90480–12320	GROMMET	1	1	1			
30	5KP–2144G–00	STAY, STOP SWITCH	1	1	1			
31	95807–06012	BOLT, FLANGE	1	1	1			
32	4VR–21161–00	HOLDER, CABLE	1	1	1			
33	3FY–21575–01	SEAL 1	1	1	1			
34	4GY–2214F–00	DAMPER 1	1	1	1			
35	5FB–2179V–40	PLATE, EPA 1(NON CALIFORNIA)	1					
	5FB–2179R–40	PLATE, EPA 2 (CALIFORNIA)		1				
36	3HA–24141–00	PROTECTOR, FUEL TANK	1	1	1			
37	5KP–21266–00	SHEET 1	1	1	1			

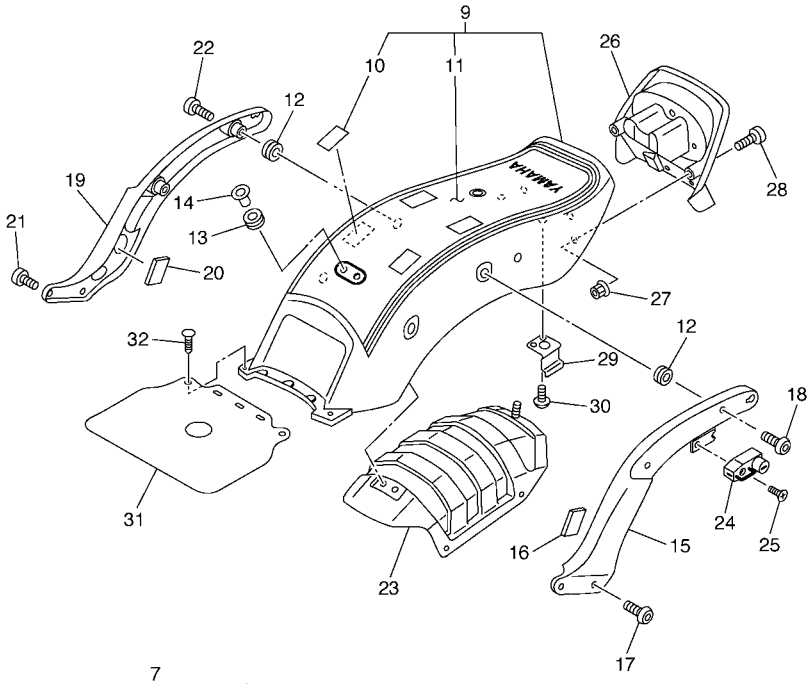

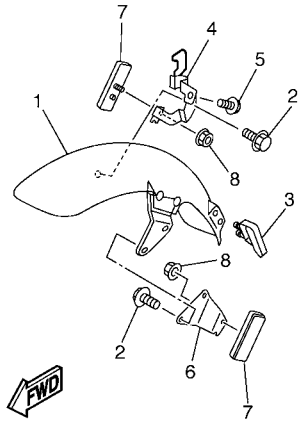

5FBN100-C190

FIG. 19 FENDER

REF. NO.	PART NO.	DESCRIPTION	5FBS	5FBT	5FBU			REMARKS
1	4TR–21510–10–P0	FRONT FENDER COMP.	1	1	1			SMX
2	95027–08012	BOLT, FLANGE	4	4	4			
3	4VR–21518–00	HOLDER, CABLE	1	1	1			
4	5FB–21598–01	HOLDER, WIRE 2	1	1	1			
5	95807–06012	BOLT, FLANGE	1	1	1			
6	5FB–85112–00	BRACKET, REFLECTOR 1	1	1	1			
7	11H–85110–01	REFLECTOR ASSY	2	2	2			
8	95707–05500	NUT, FLANGE	2	2	2			
9	4TR–Y2161–0F–PF	REAR FENDER COMP.	1	1	1			SMX
10	3SP–21732–00	.SEAL 1	4	4	4			
11	5FB–21675–20	.GRAPHIC, REAR FENDER	1	1	1			
12	90480–18418	GROMMET	4	4	4			
13	90480–13398	GROMMET	3	3	3			
14	90387–067N5	COLLAR	3	3	3			
15	4TR–21613–10–P0	STAY, FENDER 1	1	1	1			MBL2
16	3SX–2139X–00	DAMPER	1	1	1			
17	90157–10043	SCREW, PAN HEAD	2	2	2			
18	92014–08040	BOLT, BUTTON HEAD	2	2	2			
19	4TR–21614–10–P0	STAY, FENDER 2	1	1	1			MBL2
20	3SX–2139X–00	DAMPER	1	1	1			
21	90157–10043	SCREW, PAN HEAD	2	2	2			
22	92014–08040	BOLT, BUTTON HEAD	2	2	2			
23	4TR–21643–00	STAY, REAR	1	1	1			
24	4R8–21308–00	HELMET HANGER ASSY	1	1	1			
25	90149–06154	SCREW	1	1	1			
26	5FB–2162R–00	FENDER 2	1	1	1			
27	90179–05523	NUT	2	2	2			

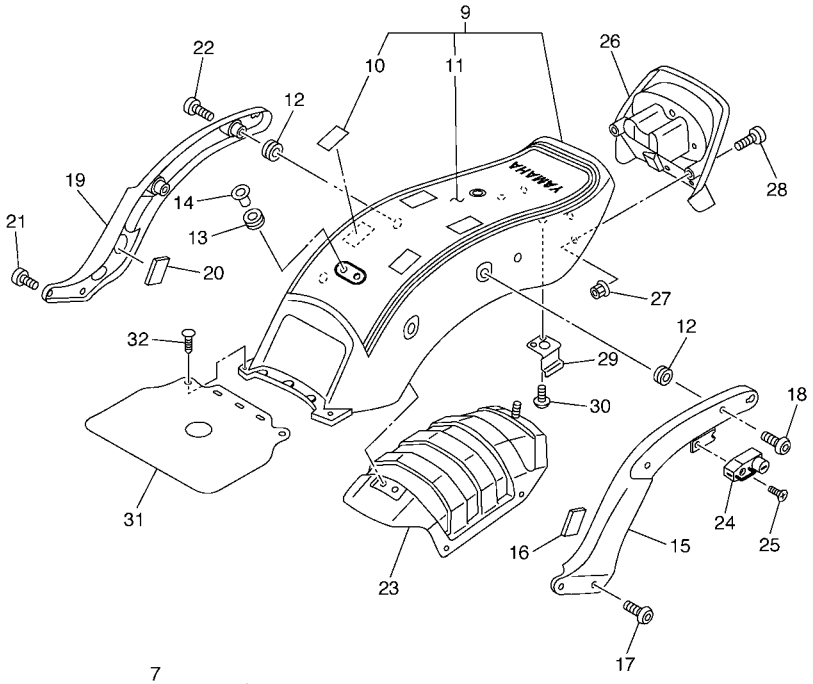

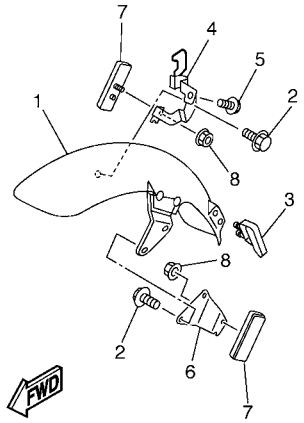

5FBN100-C190

FIG. 19 FENDER

REF. NO.	PART NO.	DESCRIPTION	5FBS	5FBT	5FBU			REMARKS
28	90154–05011	SCREW, BINDING	2	2	2			
29	4TR–21679–00	HOLDER, HARNESS	2	2	2			
30	90167–05025	SCREW, TAPPING	2	2	2			
31	4TR–21629–00	GUARD, MUD	1	1	1			
32	90269–05039	RIVET	2	2	2			

PARTS NEWS

YAMAHA
YAMAHA MOTOR CO., LTD.
2500 SHINGAI IWATA SHIZUOKA JAPAN

News No. PE0-MC-050125(1/2)

Date: Sep,19,2005

Signature: K.Otsuka

Model	XVS650T/XVS650TC (5FBS,5FBU/5FBT)
Subject	PARTS CATALOGUE MODIFICATION
CATALOGUE NO.	1D5FB-100E1 / 2D5FB-100E1

Please make the following corrections to your parts catalogue.

1. LIST CORRECTION

FIG. 19 FENDER & FIG. 26 SEAT

FIG.No.	Ref.No.	OLD P/No.	NEW P/No.	PARTS NAME	Q'TY	REMARKS
19	9	4TR-Y2161-0F-PF	**4TR-W2161-0F-PF**	REAR FENDER COMP.	1	SMX
19	9-1	———	**5FB-24737-00**	DAMPER	1	**added**
19	13	90480-13398	←———	GROMMET	**2**	**Q'TY 3→2**
19	14	90387-067N5	←———	COLLAR	**2**	**Q'TY 3→2**
19	23	4TR-21643-00	**4TR-21643-01**	STAY, REAR	1	
26	10	4TR-24750-10	**4TR-24750-31**	TANDEM SEAT ASSY	1	
26	10-1	———	**5YS-24742-00**	. GROMMET	1	**added**
26	10-2	———	**90201-08042**	WASHER, PLAIN	1	**added**
26	10-3	———	**90387-081M9**	COLLAR	1	**added**
26	13	4TR-2475J-00	**5FB-2475J-01**	. BRACKET, SEAT LEVER 2	1	
26	16	90176-06047	**90176-08001**	NUT, CAP	1	

ILLUSTRATION CORRECTION is next page.

Parts Manager Check	Service Manager Check	Parts Manager File

YAMAHA MOTOR CO.,LTD
2500 Shingai Iwata Shizuoka 438-8501.Japan
Tech. Pub. & Quality Coordination Dept.

YAMAHA GENUINE Parts & Accessories

PARTS NEWS

YAMAHA
YAMAHA MOTOR CO., LTD.
2500 SHINGAI IWATA SHIZUOKA JAPAN

News No. PE0-MC-050125(2/2)

Date Sep,19,2005

Signature: K.Otsuka

Model	XVS650T/XVS650TC (5FBS,5FBU/5FBT)
Subject	PARTS CATALOGUE MODIFICATION
CATALOGUE NO.	1D5FB-100E1 / 2D5FB-100E1

2. ILLUSTRATION CORRECTION

Illustration should be read as follows.

(INCORRECT)

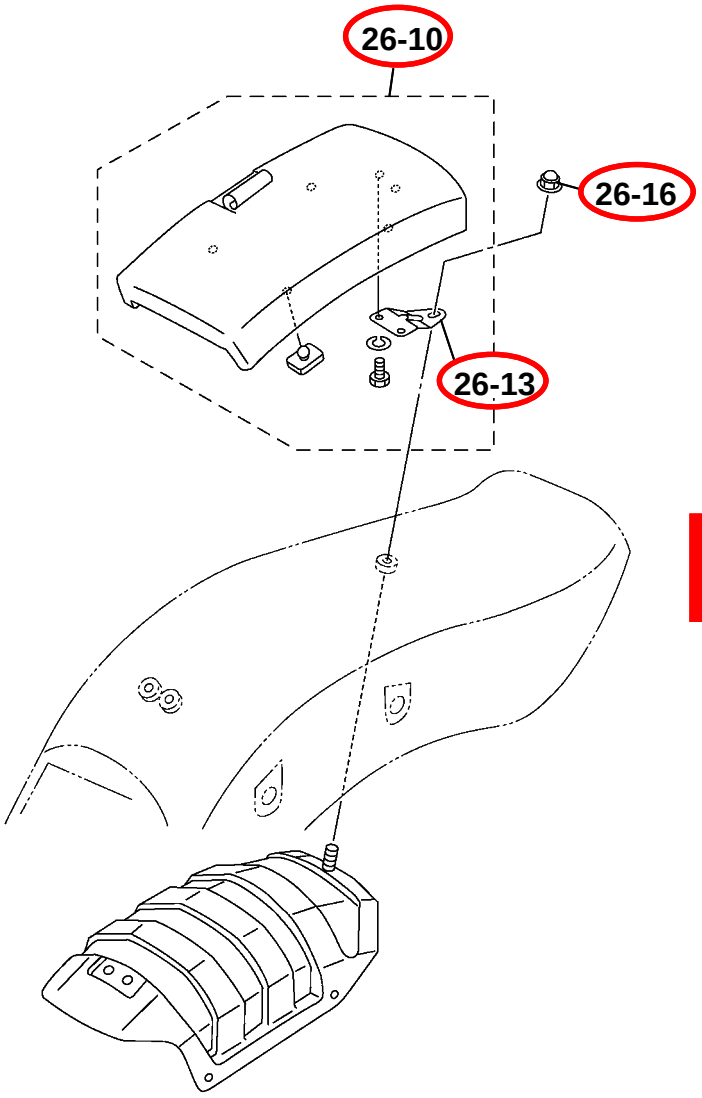

(CORRECT)

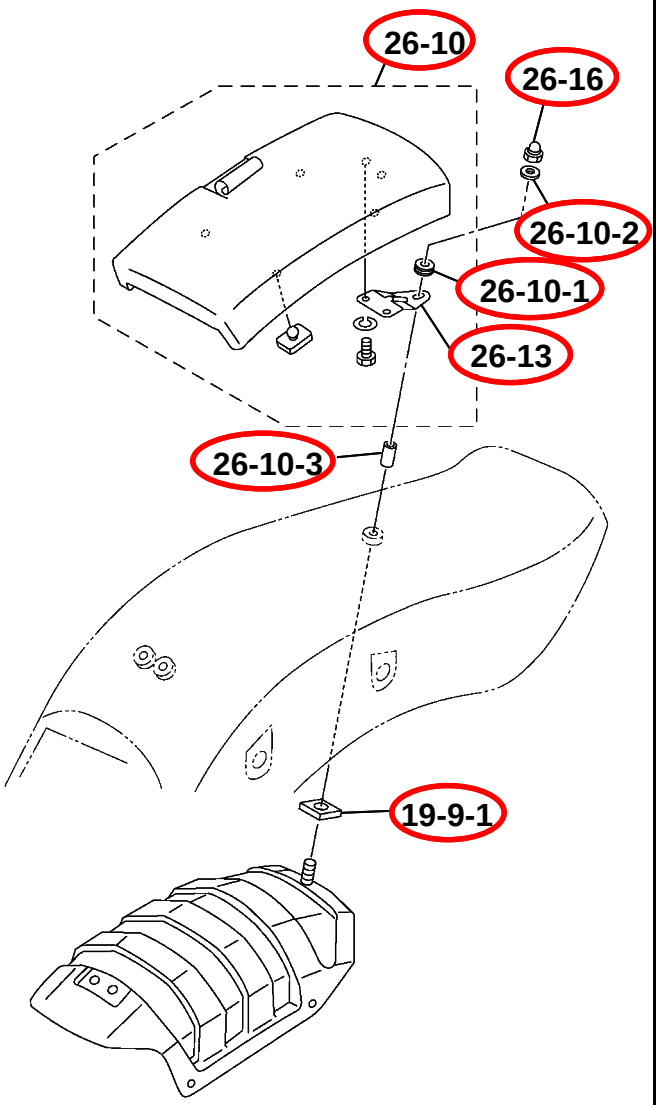

Thank you very much for your cooperation.

Parts Manager Check	Service Manager Check	Parts Manager File

YAMAHA MOTOR CO.,LTD
2500 Shingai Iwata Shizuoka 438-8501.Japan
Tech. Pub. & Quality Coordination Dept.

YAMAHA GENUINE Parts & Accessories

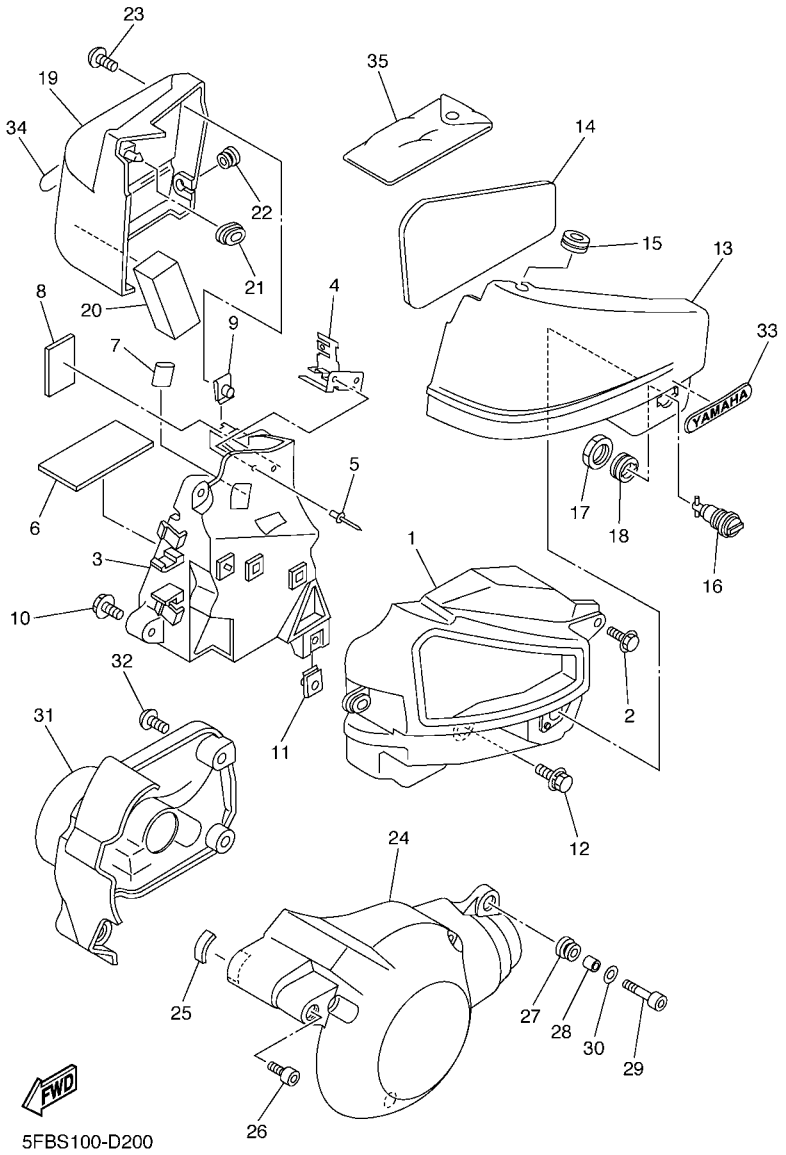

FIG. 20 SIDE COVER

REF. NO.	PART NO.	DESCRIPTION	5FBS	5FBT	5FBU			REMARKS
1	4TR–2160A–00	BOX COMP.	1	1	1			
2	90119–06118	BOLT, WITH WASHER	1	1	1			
3	4TR–2177G–02	BOX, BATTERY	1		1			
	4TR–2177G–10	BOX, BATTERY		1				
4	5SC–2172K–00	BRACKET 1	1	1	1			
5	90267–32018	RIVET, BLIND	2	2	2			
6	5Y1–82122–00	SEAT, BATTERY	1	1	1			
7	90446–14359	HOSE	1	1	1			
8	22F–2139X–00	DAMPER	1	1	1			
9	90183–06053	NUT, SPRING	1	1	1			
10	90119–06118	BOLT, WITH WASHER	3	3	3			
11	90183–06023	NUT, SPRING	1	1	1			
12	90119–06097	BOLT, WITH WASHER	1	1	1			
13	5BN–21711–10–PJ	COVER, SIDE 1	1	1	1			MBL2
14	4TR–21717–00	DAMPER	1	1	1			
15	90480–12320	GROMMET	1	1	1			
16	55K–21708–00	LOCK ASSY 2	1	1	1			
17	90170–22187	NUT	1	1	1			
18	90480–24186	GROMMET	1	1	1			
19	5BN–21721–00–PJ	COVER, SIDE 2	1	1	1			MBL2
20	84M–77555–00	PROTECTOR 5	1	1	1			
21	90480–01559	GROMMET	1	1	1			
22	90480–12320	GROMMET	1	1	1			
23	90149–06302	SCREW	1	1	1			
24	4TR–21731–20	COVER, SIDE 3	1	1	1			
25	22F–21746–01	DAMPER	1	1	1			
26	91314–06012	BOLT	2	2	2			

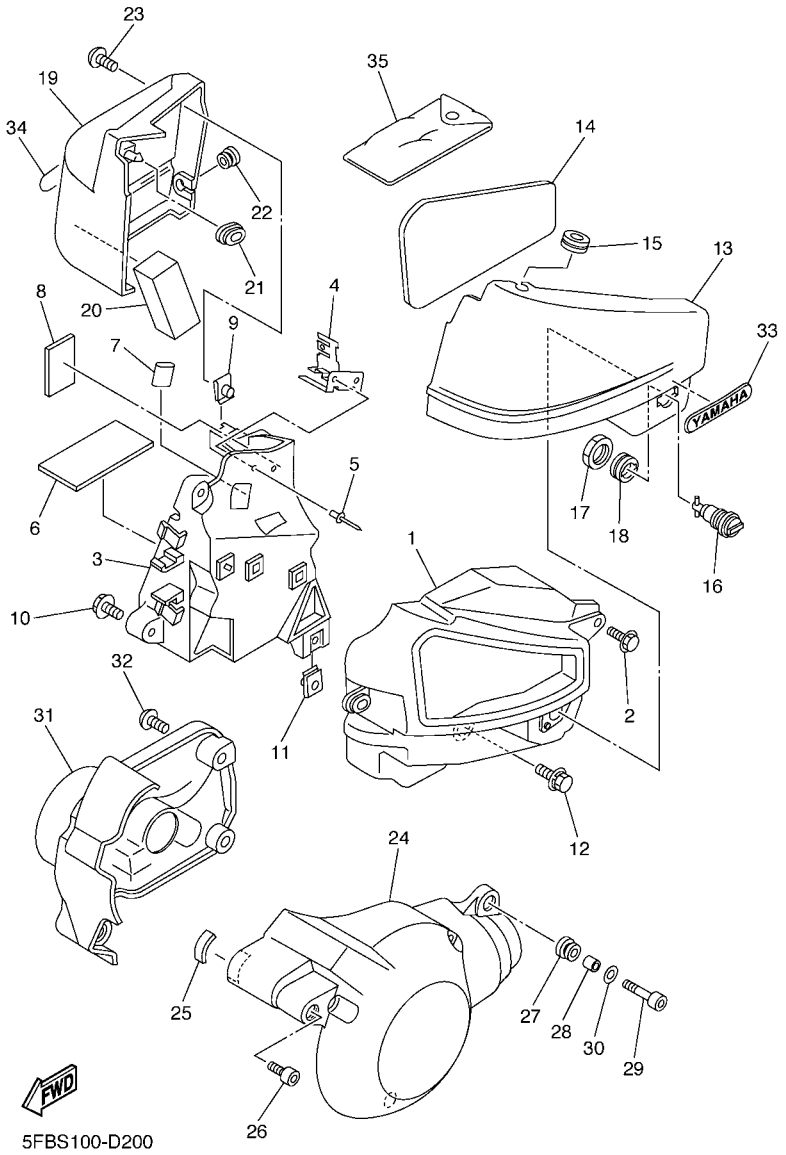

FIG. 20 SIDE COVER

REF. NO.	PART NO.	DESCRIPTION	5FBS	5FBT	5FBU			REMARKS
27	90480–10289	GROMMET	4	4	4			
28	90387–064M9	COLLAR	4	4	4			
29	91314–06020	BOLT	4	4	4			
30	90201–06062	WASHER, PLATE	4	4	4			
31	4VR–21741–00	COVER, SIDE 4	1	1	1			
32	90110–06200	BOLT, HEXAGON SOCKET HEAD	4	4	4			
33	3LS–21781–10	EMBLEM,1	1	1	1			
34	3LS–21781–10	EMBLEM,1	1	1	1			
35	4TR–28100–00	TOOL KIT	1	1	1			

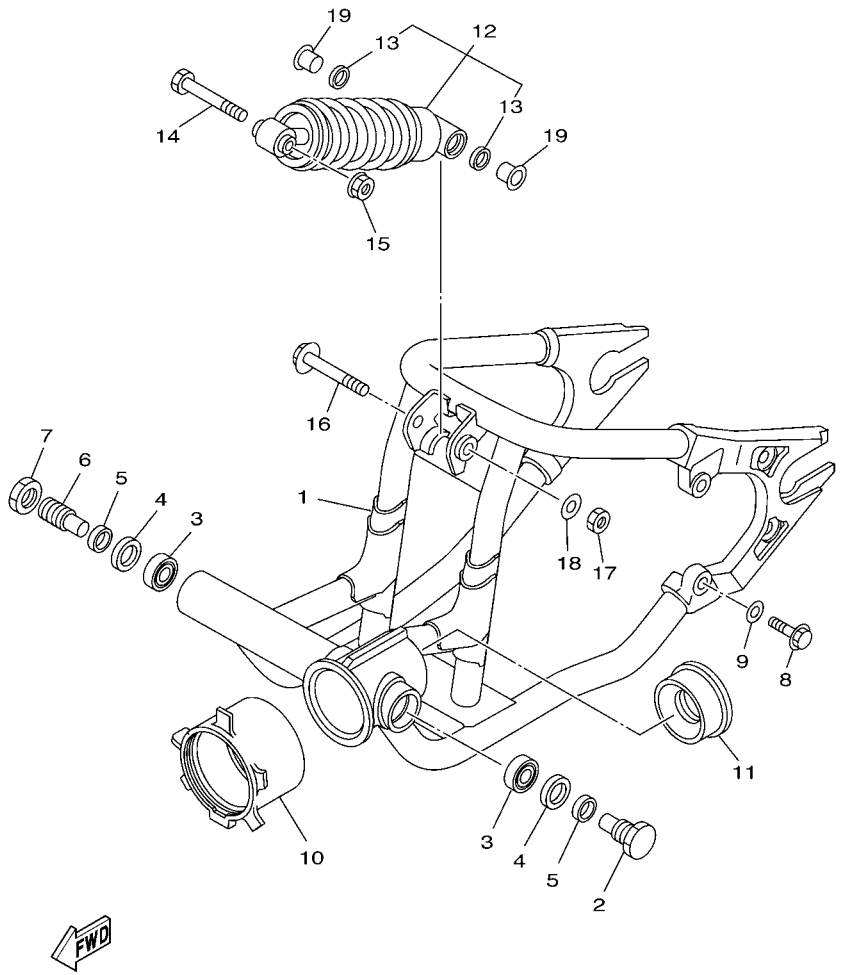

4VR1300-7210

FIG. 21 REAR ARM & SUSPENSION

REF. NO.	PART NO.	DESCRIPTION	5FBS	5FBT	5FBU			REMARKS
1	4VR–22110–30	REAR ARM COMP.	1	1	1			
2	4KM–22141–00	SHAFT, PIVOT	1	1	1			
3	93332–00010	BEARING	2	2	2			
4	93102–25017	OIL SEAL	2	2	2			
5	90387–17543	COLLAR	2	2	2			
6	1J7–22141–00	SHAFT, PIVOT	1	1	1			
7	1J7–22143–00	NUT	1	1	1			
8	90105–101A9	BOLT, FLANGE	4	4	4			
9	90201–112U0	WASHER, PLATE	4	4	4			
10	4TR–22189–00	BOOT, RUBBER	1	1	1			
11	4VR–22184–00	BUSH	1	1	1			
12	5FB–22210–00	SHOCK ABSORBER ASSY, REAR	1	1				
	5FB–22210–10	SHOCK ABSORBER ASSY, REAR			1			
13	93109–18020	.OIL SEAL	2	2	2			
14	90109–125F1	BOLT	1	1	1			
15	95607–12200	NUT, SELF-LOCKING	1	1	1			
16	90109–125F1	BOLT	1	1	1			
17	95607–12100	NUT, U	1	1	1			
18	90201–124G9	WASHER, PLATE	1	1	1			
19	90387–123X6	COLLAR	2	2	2			

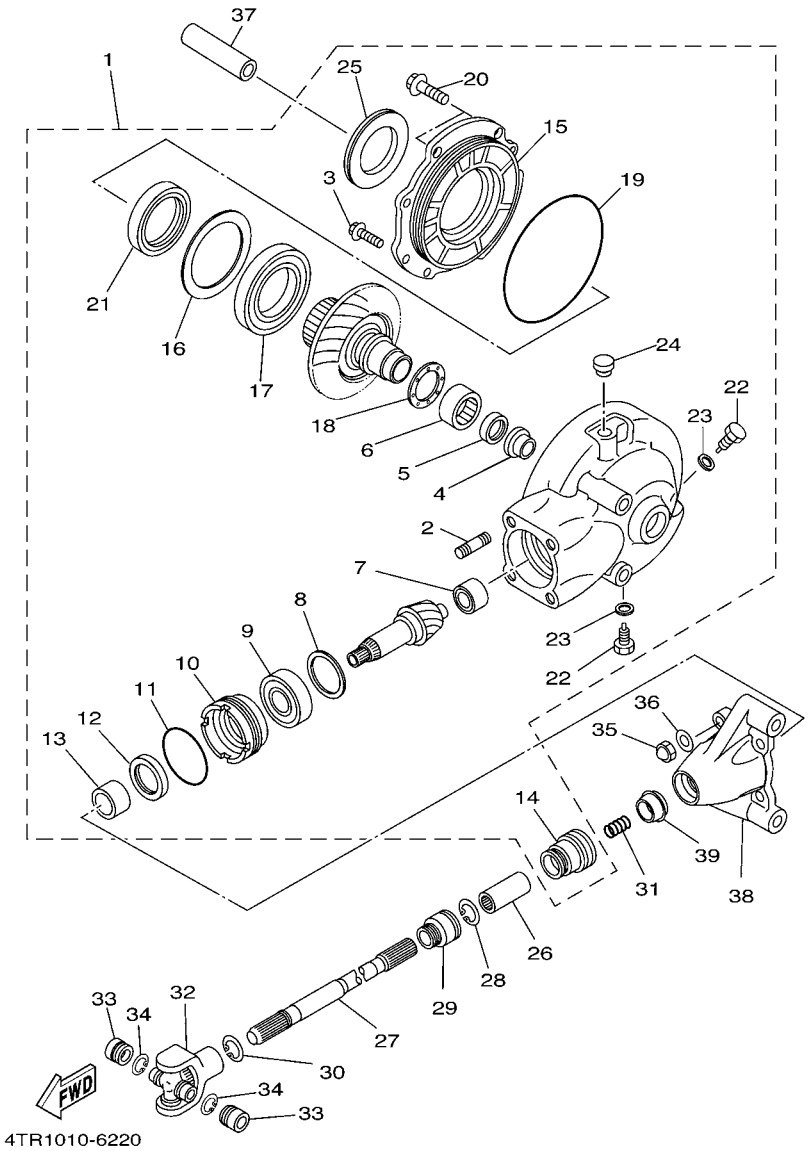

FIG. 22 DRIVE SHAFT

REF. NO.	PART NO.	DESCRIPTION	5FBS	5FBT	5FBU			REMARKS
1	4TR–46101–00	REAR AXLE GEAR CASE ASSY	1	1	1			Go to P/N: PE0-MC-060080
2	90116–10593	.BOLT, STUD	4	4	4			Go to P/N: PE0-MC-060080
3	90119–08126	.BOLT, WITH WASHER	6	6	6			Go to P/N: PE0-MC-060080
4	22U–46153–00	.COLLAR, GUIDE	1	1	1			Go to P/N: PE0-MC-060080
5	93101–30084	.OIL SEAL	1	1	1			Go to P/N: PE0-MC-060080
6	93311–43729	.BEARING	1	1	1			Go to P/N: PE0-MC-060080
7	2H7–46102–00	.BEARING ASSY	1	1	1			Go to P/N: PE0-MC-060080
8	1J7–17537–Y0–30	.SHIM, THRUST (0.30T)	1	1	1			UR Go to P/N: PE0-MC-060080
	1J7–17537–Y0–40	.SHIM, THRUST (0.40T)	1	1	1			UR Go to P/N: PE0-MC-060080
	1J7–17537–Y0–50	.SHIM, THRUST (0.50T)	1	1	1			UR Go to P/N: PE0-MC-060080
9	93306–30539	.BEARING	1	1	1			Go to P/N: PE0-MC-060080
10	4H7–46125–00	.RETAINER, BEARING	1	1	1			Go to P/N: PE0-MC-060080
11	93210–60426	.O-RING	1	1	1			Go to P/N: PE0-MC-060080
12	93101–38098	.OIL SEAL	1	1	1			Go to P/N: PE0-MC-060080
13	90387–256G9	.COLLAR	1	1	1			Go to P/N: PE0-MC-060080
14	22U–46136–00	.SEAL 1	1	1	1			Go to P/N: PE0-MC-060080
15	22U–46152–00	.HOUSING, BEARING	1	1	1			Go to P/N: PE0-MC-060080
16	22U–46117–00–25	.SHIM, RING GEAR (0.25T)	1	1	1			UR Go to P/N: PE0-MC-060080
	22U–46117–00–30	.SHIM, RING GEAR (0.30T)	1	1	1			UR Go to P/N: PE0-MC-060080
	22U–46117–00–40	.SHIM, RING GEAR (0.40T)	1	1	1			UR Go to P/N: PE0-MC-060080
17	93316–01301	.BEARING	1	1	1			Go to P/N: PE0-MC-060080
18	22U–46118–00–12	.SHIM, THRUST (1.2T)	1	1	1			UR Go to P/N: PE0-MC-060080
	22U–46118–00–14	.SHIM, THRUST (1.4T)	1	1	1			UR Go to P/N: PE0-MC-060080
	22U–46118–00–16	.SHIM, THRUST (1.6T)	1	1	1			UR Go to P/N: PE0-MC-060080
	22U–46118–00–18	.SHIM, THRUST (1.8T)	1	1	1			UR Go to P/N: PE0-MC-060080
	22U–46118–00–20	.SHIM, THRUST (2.0T)	1	1	1			UR Go to P/N: PE0-MC-060080
19	93211–39569	.O-RING	1	1	1			Go to P/N: PE0-MC-060080

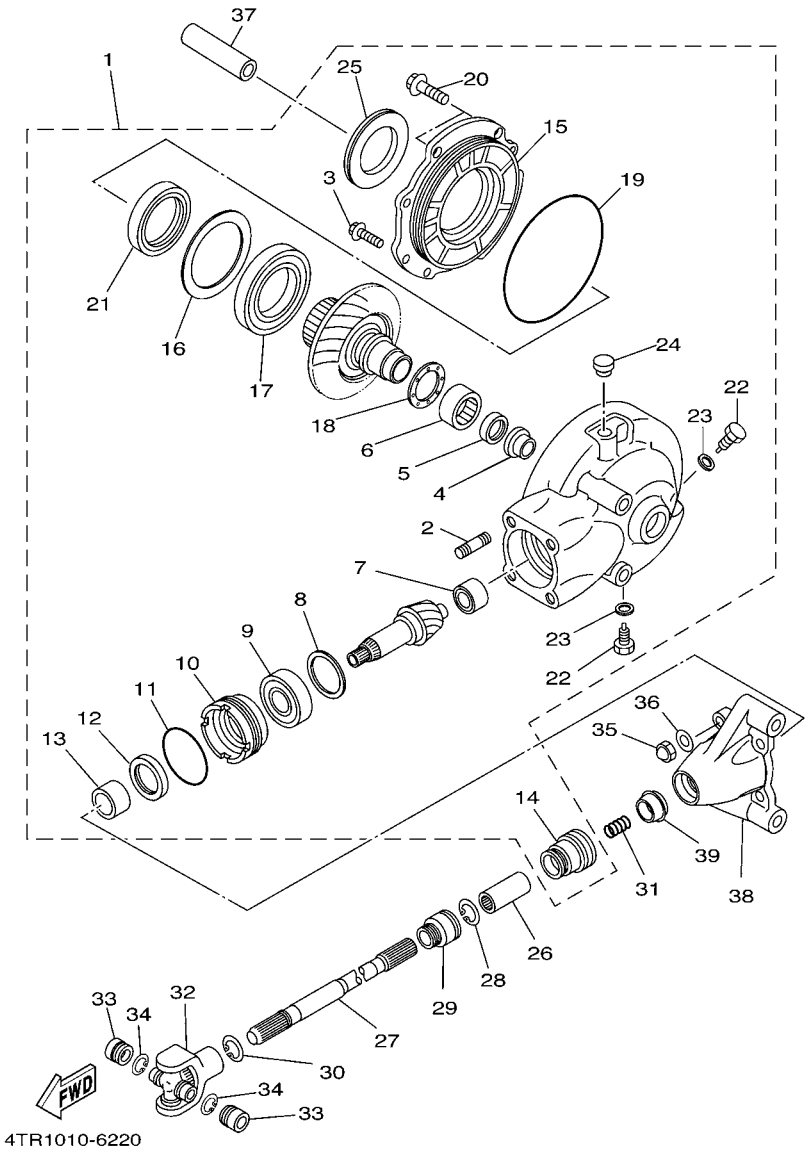

FIG. 22 DRIVE SHAFT

REF. NO.	PART NO.	DESCRIPTION	5FBS	5FBT	5FBU			REMARKS
20	90105–10285	.BOLT, FLANGE	2	2	2			Go to P/N: PE0-MC-060080
21	93102–65277	.OIL SEAL	1	1	1			Go to P/N: PE0-MC-060080
22	90340–14132	.PLUG, STRAIGHT SCREW	2	2	2			Go to P/N: PE0-MC-060080
23	214–11198–01	.GASKET	2	2	2			Go to P/N: PE0-MC-060080
24	56W–17590–00	.BREATHER COMP.	1	1	1			Go to P/N: PE0-MC-060080
25	1J7–25319–02	.SEAL, HUB DUST	1	1	1			Go to P/N: PE0-MC-060080
26	22U–46123–00	COUPLING, GEAR	1	1	1			Go to P/N: PE0-MC-060080
27	5BN–46171–00	SHAFT DRIVE ASSY	1	1	1			Go to P/N: PE0-MC-060080
28	99009–18400	CIRCLIP	1	1	1			Go to P/N: PE0-MC-060080
29	22U–46137–00	SEAL 2	1	1	1			Go to P/N: PE0-MC-060080
30	93410–22039	CIRCLIP	1	1	1			Go to P/N: PE0-MC-060080
31	90501–15722	SPRING, COMPRESSION	1	1	1			Go to P/N: PE0-MC-060080
32	4X7–46180–00	CROSS JOINT COMP.	1	1	1			Go to P/N: PE0-MC-060080
33	93311–21044	BEARING	2	2	2			Go to P/N: PE0-MC-060080
34	93440–20088	CIRCLIP	2	2	2			Go to P/N: PE0-MC-060080
35	90176–10075	NUT, CROWN	4	4	4			Go to P/N: PE0-MC-060080
36	92990–10600	WASHER, PLATE	4	4	4			Go to P/N: PE0-MC-060080
37	90387–1510D	COLLAR	1	1	1			Go to P/N: PE0-MC-060080
38	4TR–46154–00	COVER, HOUSING	1	1	1			Go to P/N: PE0-MC-060080
39	4TR–46297–00	COVER, DUST	1	1	1			Go to P/N: PE0-MC-060080

PARTS NEWS

News No. PE0-MC-060080(1/3) Revise

Date: January,11, 2007

Signature: K.Otsuka

Model	XVS650 (See the "List of Models and CATALOGUE No's ." on the last page.)
Subject	PARTS CATALOGUE CORRECTIONS
CATALOGUE NO.	See the "List of Models and CATALOGUE No's ." on the last page.

Revised parts catalogue will be issued by PDF and be uploaded to YPEC within one month.
(YPEC=Yamaha parts Electrical Catalogue = Website parts catalogue)

1. LIST CORRECTION
FIG.22 DRIVE SHAFT

OLD Ref.No.	NEW Ref.No.	OLD PART No.	NEW PART No.	PART NAME	Q'TY	REMARKS
—	1	————	**5FB-Y4617-00**	**SHAFT DRIVE SUB ASSY**	**1**	**added**
1	~~2~~	4TR–46101–00	~~delete~~	~~.REAR AXLE GEAR CASE ASSY~~	~~1~~	~~added "." Mark~~
2	3	90116–10593	←	.BOLT, STUD	4	~~change "." Mark → ".." Mark~~
3	4	90119–08126	←	.BOLT, WITH WASHER	6	~~change "." Mark → ".." Mark~~
4	5	22U–46153–00	←	.COLLAR, GUIDE	1	~~change "." Mark → ".." Mark~~
5	6	93101–30084	←	.OIL SEAL	1	~~change "." Mark → ".." Mark~~
6	7	93311–43729	←	.BEARING	1	~~change "." Mark → ".." Mark~~
7	8	2H7–46102–00	←	.BEARING ASSY	1	~~change "." Mark → ".." Mark~~
8	9	1J7–17537–Y0–30	←	.SHIM, THRUST (0.30T)	1	~~UR change "." Mark → ".." Mark~~
		1J7–17537–Y0–40	←	.SHIM, THRUST (0.40T)	1	~~UR change "." Mark → ".." Mark~~
		1J7–17537–Y0–50	←	.SHIM, THRUST (0.50T)	1	~~UR change "." Mark → ".." Mark~~
9	10	93306–30539	←	.BEARING	1	~~change "." Mark → ".." Mark~~
10	11	4H7–46125–00	←	.RETAINER, BEARING	1	~~change "." Mark → ".." Mark~~
11	12	93210–60426	←	.O-RING	1	~~change "." Mark → ".." Mark~~
12	13	93101–38098	←	.OIL SEAL	1	~~change "." Mark → ".." Mark~~
13	14	90387–256G9	←	.COLLAR	1	~~change "." Mark → ".." Mark~~
14	15	22U–46136–00	**5FB-46136-00**	.SEAL 1	1	~~change "." Mark → ".." Mark~~
15	16	22U–46152–00	←	.HOUSING, BEARING	1	~~change "." Mark → ".." Mark~~
16	17	22U–46117–00–25	←	.SHIM, RING GEAR (0.25T)	1	~~UR change "." Mark → ".." Mark~~
		22U–46117–00–30	←	.SHIM, RING GEAR (0.30T)	1	~~UR change "." Mark → ".." Mark~~
		22U–46117–00–40	←	.SHIM, RING GEAR (0.40T)	1	~~UR change "." Mark → ".." Mark~~
17	18	93316–01301	←	.BEARING	1	~~change "." Mark → ".." Mark~~
18	19	22U–46118–00–12	←	.SHIM, THRUST (1.2T)	1	~~UR change "." Mark → ".." Mark~~
		22U–46118–00–14	←	.SHIM, THRUST (1.4T)	1	~~UR change "." Mark → ".." Mark~~
		22U–46118–00–16	←	.SHIM, THRUST (1.6T)	1	~~UR change "." Mark → ".." Mark~~
		22U–46118–00–18	←	.SHIM, THRUST (1.8T)	1	~~UR change "." Mark → ".." Mark~~
		22U–46118–00–20	←	.SHIM, THRUST (2.0T)	1	~~UR change "." Mark → ".." Mark~~
19	20	93211–39569	←	.O-RING	1	~~change "." Mark → ".." Mark~~
20	21	90105–10285	←	.BOLT, FLANGE	2	~~change "." Mark → ".." Mark~~
21	22	93102–65277	←	.OIL SEAL	1	~~change "." Mark → ".." Mark~~
22	23	90340–14132	←	.PLUG, STRAIGHT SCREW	2	~~change "." Mark → ".." Mark~~
23	24	214–11198–01	←	.GASKET	2	~~change "." Mark → ".." Mark~~
24	25	56W–17590–00	←	.BREATHER COMP.	1	~~change "." Mark → ".." Mark~~
25	26	1J7–25319–02	←	.SEAL, HUB DUST	1	~~change "." Mark → ".." Mark~~
26	27	22U–46123–00	←	.COUPLING, GEAR	1	**added "." Mark**
27	28	5BN–46171–00~~S~~	**5FB-46171-00**	.SHAFT DRIVE ASSY	1	**added "." Mark**
28	29	99009–18400	←	.CIRCLIP	1	**added "." Mark**
29	30	22U–46137–00	**5FB-46137-00**	.SEAL 2	1	**added "." Mark**
30	31	93410–22039	←	.CIRCLIP	1	**added "." Mark**
31	32	90501–15722	←	.SPRING, COMPRESSION	1	**added "." Mark**
32	37	4X7–46180–00	←	CROSS JOINT COMP.	1	
33	38	93311–21044	←	BEARING	2	
34	39	93440–20088	←	CIRCLIP	2	
35	33	90176–10075	←	.NUT, CROWN	4	**added "." Mark**
36	34	92990–10600	←	.WASHER, PLATE	4	**added "." Mark**
37	40	90387–1510D	←	COLLAR	1	
38	35	4TR–46154–00	←	.COVER, HOUSING	1	**added "." Mark**
39	36	4TR–46297–00	←	.COVER, DUST	1	**added "." Mark**

*;These changes are applied from initial production.
ILLUSTRATION CORRECTION is next page.

Parts Manager Check | Service Manager Check | Parts Manager File

YAMAHA MOTOR CO.,LTD
2500 Shingai Iwata Shizuoka 438-8501.Japan
Technical Publication Dept.

PARTS NEWS

YAMAHA
YAMAHA MOTOR CO., LTD.
2500 SHINGAI IWATA SHIZUOKA JAPAN

News No. PE0-MC-060080(2/3) Revis

Date: January,11, 2007

Signature: K.Otsuka

2. ILLUSTRATION CORRECTION

Illustration should be read as follows.

FIG.22 DRIVE SHAFT

(INCORRECT)

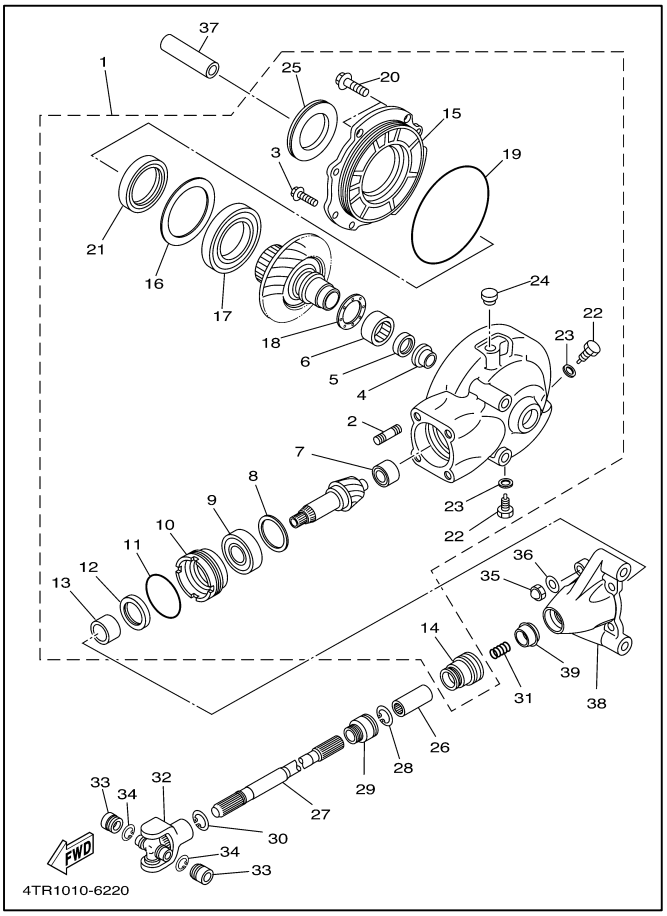

(CORRECT)

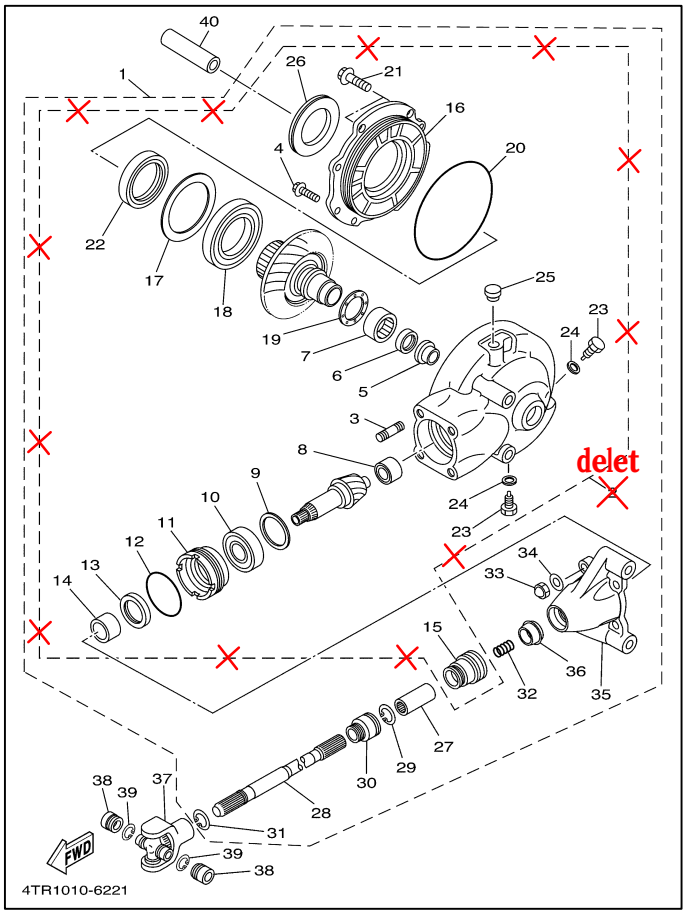

Parts Manager Check	Service Manager Check	Parts Manager File

YAMAHA MOTOR CO.,LTD
2500 Shingai Iwata Shizuoka 438-8501.Japan
Technical Publication Dept.

YAMAHA GENUINE Parts & Accessories

PARTS NEWS

YAMAHA
YAMAHA MOTOR CO., LTD.
2500 SHINGAI IWATA SHIZUOKA JAPAN

News No. PE0-MC-060080(3/3) Revise

Date: January,11, 2007

Signature: K.Otsuka

3. List of Models and CATALOGUE No's.
The applicable MODELS, MODEL CODES, and CATALOGUE No's. are as follows.

MODEL (MODEL CODE)	CATALOGUE No.	Fig No.	MODEL (MODEL CODE)	CATALOGUE No.	Fig No.
XVS650'97(4VR1,2/4XR1,2)	174VR-300E4	22	XVS650(4VRE/4XRE)	1A4VR-300E1	22
XVS650'97(4VR1,2/4XR1,2)	174VR-332G4	22	XVS650(4VRE/4XRE)	1A4VR-332G1	22
XVS650'97(4VR1,2/4XR1,2)	174VR-351F3	22	XVS650(4VRE/4XRE)	1A4VR-351F1	22
XVS650'97(4VR1,2/4XR1,2)	174VR-352S4	22	XVS650(4VRE/4XRE)	1A4VR-352S1	22
XVS650'97(4XP1,2)	174XP-361E3	22	XVS650P(4XS8)	1A4XS-700E1	22
XVS650J(4XS1,2)	174XS-700E2	22	XVS650P/PC(5FBG,J/5FBH)	1A5FB-100E1	22
XVS650'98(4VR3,4/4XR3,4)	184VR-300E2	22	XVS650AP/APC(5SC1,3/5SC2)	1A5SC-100E1	22
XVS650'98(4VR3,4/4XR3,4)	184VR-332G2	22	XVS650A(5SC5,6)	1A5SC-300E1	22
XVS650'98(4VR3,4/4XR3,4)	184VR-351F2	22	XVS650A(5SC5,6)	1A5SC-332G1	22
XVS650'98(4VR3,4/4XR3,4)	184VR-352S2	22	XVS650A(5SC5,6)	1A5SC-351F1	22
XVS650'98(4XP3,4)	184XP-361E2	22	XVS650A(5SC5,6)	1A5SC-352S1	22
XVS650'98(4VR5,6/4XR5,6)	184XR-332G2	22	XVS650AP(5SC4)	1A5SC-700E1	22
XVS650K(4XS3,4)	184XS-700E1	22	XVS650R(4XS9)	1B4XS-700E1	22
XVS650AK/AKC(5BN1,3/5BN2)	185BN-100E2	22	XVS650R/RC(5FBK,M/5FBL)	1B5FB-100E1	22
XVS650A'98(5BN4,8,9)	185BN-300E2	22	XVS650AR/ARC(5SC7,9/5SC8)	1B5SC-100E1	22
XVS650A'98(5BN5,8)	185BN-332G2	22	XVS650ATR/ATRC(5SCB,D/5SCC)	1B5SC-100EA	22
XVS650A'98(5BN4,9)	185BN-351F2	22	XVS650A(5SCA)	1B5SC-700E1	22
XVS650A'98(5BN4,9)	185BN-352S2	22	XVS650(5WD1)	1B5WD-280S1	22
XVS650AK(5BN7)	185BN-700E1	22	XVS650S(4XSA)	1C4XS-700E1	22
XVS650(5EW1)	185EW-210S1	22	XVS650S(5FBN/5FBR)	1C5FB-100E1	22
XVS650(5EW1)	185EW-300E1	22	XVS650S/SC(5FBN/5FBP)	1C5FB-110E1	22
XVS650'98(5EW1)	185EW-440E1	22	XVS650AS(5SCF,5SCG)	1C5SC-100E1	22
XVS650K(5FB1,4/5FB2,5/5FB3,6)	185FB-100E1	22	XVS650ATS(5SCJ)	1C5SC-100EA	22
XVS650'99(4VR7,8/4XR7,8)	194VR-300E2	22	XVS650AS/ASC(5SCF/5SCL)	1C5SC-110E1	22
XVS650'99(4VR7,8/4XR7,8)	194VR-332G2	22	XVS650ATS/ATSC(5SCJ/5SCM)	1C5SC-110EA	22
XVS650'99(4VR7,8/4XR7,8)	194VR-351F2	22	XVS650A(5SCE,K)	1C5SC-300E1	22
XVS650'99(4VR7,8/4XR7,8)	194VR-352S1	22	XVS650A(5SCE,K)	1C5SC-332G1	22
XVS650'99(4VR9,A/4XR9,A)	194XR-332G2	22	XVS650A(5SCE,K)	1C5SC-351F1	22
XVS650L(4XS5)	194XS-700E2	22	XVS650A(5SCE,K)	1C5SC-352S1	22
XVS650AL/ALC(5BNE,G/5BNF)	195BN-100E2	22	XVS650AS(5SCH)	1C5SC-700E1	22
XVS650A'99(5BNA,C,D)	195BN-300E2	22	XVS650T/TC(3B61,3/3B62)	1D3B6-100E1	22
XVS650A'99(5BNA,B)	195BN-332G1	22	XVS650T(3B71)	1D3B7-700E1	22
XVS650A'99(5BNC,D)	195BN-351F2	22	XVS650T(4XSB)	1D4XS-700E1	22
XVS650A'99(5BNC,D)	195BN-352S1	22	XVS650T/TC(5FBS,U/5FBT)	1D5FB-100E1	22
XVS650AL(5BNH)	195BN-700E2	22	XVS650AT/ATC(5SCN,R/5SCP)	1D5SC-100E1	22
XVS650L/LC(5FB7,9/5FB8)	195FB-100E2	22	XVS650ATT/ATTC(5SCT,V/5SCU)	1D5SC-100EA	22
XVS650(4VRB/4XRB)	104VR-300E2	22	XVS650A(5SCW,X)	1D5SC-300E1	22
XVS650(4VRB,C/4XRB,C)	104VR-332G2	22	XVS650A(5SCW,X)	1D5SC-332G1	22
XVS650(4VRB/4XRB)	104VR-351F2	22	XVS650A(5SCW,X)	1D5SC-351F1	22
XVS650(4VRB/4XRB)	104VR-352S2	22	XVS650A(5SCW,X)	1D5SC-352S1	22
XVS650AM/AMC(5BNJ/5BNK)	105BN-110E1	22	XVS650AT(5SCS)	1D5SC-700E1	22
XVS650AM(5BNR,S)	105BN-171E1	22	XVS65V/VC(3B64,6/3B65)	1E3B6-100E1	22
XVS650A(5BNL,N,P)	105BN-300E2	22	XVS650V(3B72)	1E3B7-700E1	22
XVS650A(5BNL,M)	105BN-332G2	22	XVS65ATV/ATVC(4C54,4C56/4C55)	1E4C5-100E1	22
XVS650A(5BNN,P)	105BN-351F2	22	XVS650A(4C57,8)	1E4C5-300E1	22
XVS650A(5BNN,P)	105BN-352S2	22	XVS650A(4C57,8)	1E4C5-332G1	22
XVS650M/MC(5FBA/5FBB)	105FB-110E1	22	XVS650A(4C57,8)	1E4C5-351F1	22
XVS650M(4XS6/5FBC)	105FB-171E1	22	XVS650A(4C57)	1E4C5-352S1	22
XVS650(4VRD/4XRD)	114VR-300E1	22	XVS650AV(4C53)	1E4C5-700E1	22
XVS650(4VRD/4XRD)	114VR-332G1	22	XVS650V(4XSC)	1E4XS-700E1	22
XVS650(4VRD/4XRD)	114VR-351F1	22	XVS65V/VC(5FBV,X/5FBW)	1E5FB-100E1	22
XVS650(4VRD/4XRD)	114VR-352S1	22	XVS650AV/AVC(5SCY,4C52/4C51)	1E5SC-100E1	22
XVS650N(4XS7)	114XS-700E1	22	XVS65W/WC(3B67,9/3B68)	1F3B6-100E1	22
XVS650AN/ANC(5BNT,X/5BNU)	115BN-100E1	22	XVS650W(3B73)	1F3B7-700E1	22
XVS650A(5BNV,5BNW)	115BN-300E1	22	XVS65AW/AWC(4C59,B/4C5A)	1F4C5-100E1	22
XVS650A(5BNV,5BNW)	115BN-332G1	22	XVS65ATW/ATWC(4C5D,F/4C5E)	1F4C5-100EA	22
XVS650A(5BNV,5BNW)	115BN-351F1	22	XVS650AW(4C5C)	1F4C5-700E1	22
XVS650A(5BNV,5BNW)	115BN-352S1	22	XVS650W(4XSD)	1F4XS-700E1	22
XVS650AN(5BNY)	115BN-700E1	22	XVS65WB/WCB(5FBY,5S12/5S11)	1F5FB-100E1	22
XVS650N/NC(5FBD,F/5FBE)	115FB-100E1	22			

Thank you very much for your cooperation.

Parts Manager Check | Service Manager Check | Parts Manager File

YAMAHA MOTOR CO.,LTD
2500 Shingai Iwata Shizuoka 438-8501.Japan
Technical Publication Dept.

YAMAHA GENUINE

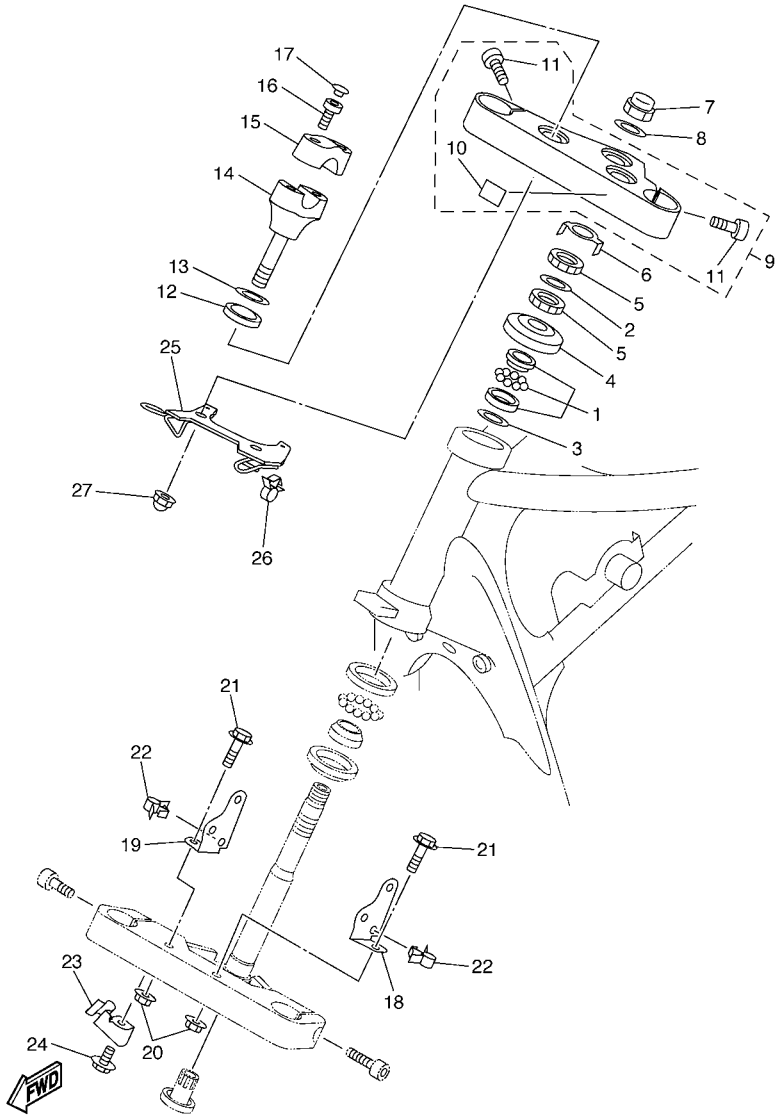

5FBN110-C230

FIG. 23 STEERING

REF. NO.	PART NO.	DESCRIPTION	5FBS	5FBT	5FBU			REMARKS
1	93399–99931	BEARING	1	1	1			
2	90202–26142	WASHER, PLATE	1	1	1			
3	90202–24190	WASHER, PLATE	1	1	1			
4	1W1–23416–00	COVER, BALL RACE 2	1	1	1			
5	90179–25033	NUT	2	2	2			
6	26H–23418–01	WASHER, SPECIAL	1	1	1			
7	90176–22081	NUT, CROWN	1	1	1			
8	90201–220T0	WASHER, PLATE	1	1	1			
9	4VR–Y2343–90	CROWN, HANDLE	1	1	1			
10	2AL–84553–00	.DAMPER	1	1	1			
11	91314–08030	.BOLT	2	2	2			
12	3DM–23445–00	DAMPER	2	2	2			
13	90201–14220	WASHER, PLATE	2	2	2			
14	4VR–23442–10	HOLDER, HANDLE LOWER	2	2	2			
15	4VR–23441–10	HOLDER, HANDLE UPPER	2	2	2			
16	91314–08025	BOLT	4	4	4			
17	90338–08163	PLUG	4	4	4			
18	4TR–23175–10	BRACKET, HEADLIGHT STAY 1	1	1	1			
19	4TR–23176–10	BRACKET, HEADLIGHT STAY 2	1	1	1			
20	95707–06500	NUT, FLANGE	2	2	2			
21	95024–06025	BOLT, FLANGE	2	2	2			
22	90464–15157	CLAMP	2	2	2			
23	4TR–25886–00	HOLDER, BRAKE HOSE	1	1	1			
24	95027–06010	BOLT, FLANGE	1	1	1			
25	5BN–23389–10	GUIDE, CABLE	1	1	1			
26	90464–18246	CLAMP	2	2	2			
27	90176–12052	NUT, CROWN	2	2	2			

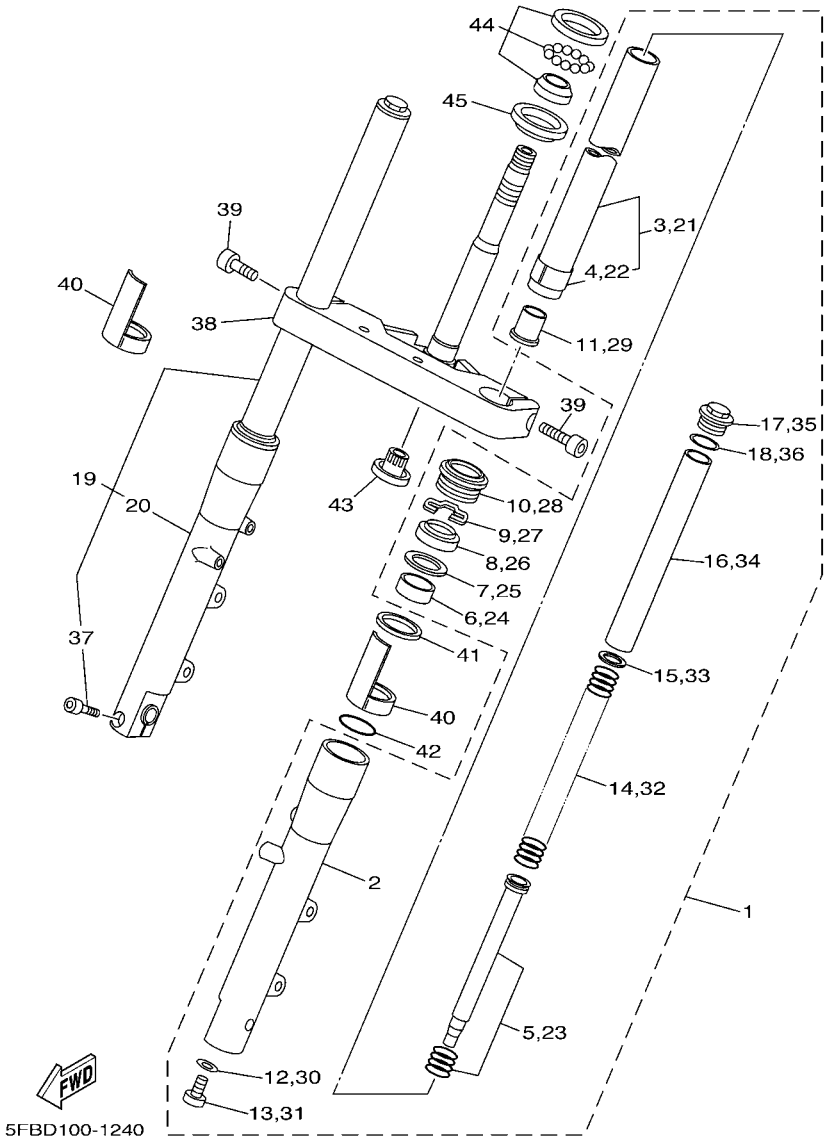

FIG. 24 FRONT FORK

REF. NO.	PART NO.	DESCRIPTION	5FBS	5FBT	5FBU			REMARKS
1	5KP–23102–20	FRONT FORK ASSY (L.H)	1	1	1			
2	5KP–23126–20	.TUBE, OUTER (LEFT)	1	1	1			
3	5KP–23110–00	.INNER TUBE COMP.1	1	1	1			
4	5BN–23171–00	..PISTON, FRONT FORK	1	1	1			
5	5KP–23170–00	.CYLINDER COMP., FRONT FORK	1	1	1			
6	4FM–23125–40	.METAL, SLIDE 1	1	1	1			
7	36Y–23146–10	.WASHER, OIL SEAL	1	1	1			
8	4EB–23145–01	.OIL SEAL	1	1	1			
9	26H–23156–00	.CLIP, OIL SEAL	1	1	1			
10	4EB–23144–00	.SEAL, DUST	1	1	1			
11	4YR–23173–00	.SPINDLE, TAPER	1	1	1			
12	509–23158–L0	.GASKET	1	1	1			
13	278–23181–50	.BOLT, HEXAGON SOCKET HEAD	1	1	1			
14	5KP–23141–00	.SPRING, FRONT FORK	1	1	1			
15	4DW–23149–40	.WASHER, SPRING UPPER	1	1	1			
16	4TR–23118–00	.SPACER	1	1	1			
17	1D0–23111–00	.BOLT, CAP	1	1	1			
18	43F–23188–10	.O-RING	1	1	1			
19	5KP–23103–20	FRONT FORK ASSY (R.H)	1	1	1			
20	5KP–23136–20	.TUBE, OUTER (RIGHT)	1	1	1			
21	5KP–23110–00	.INNER TUBE COMP.1	1	1	1			
22	5BN–23171–00	..PISTON, FRONT FORK	1	1	1			
23	5KP–23170–00	.CYLINDER COMP., FRONT FORK	1	1	1			
24	4FM–23125–40	.METAL, SLIDE 1	1	1	1			
25	36Y–23146–10	.WASHER, OIL SEAL	1	1	1			
26	4EB–23145–01	.OIL SEAL	1	1	1			
27	26H–23156–00	.CLIP, OIL SEAL	1	1	1			

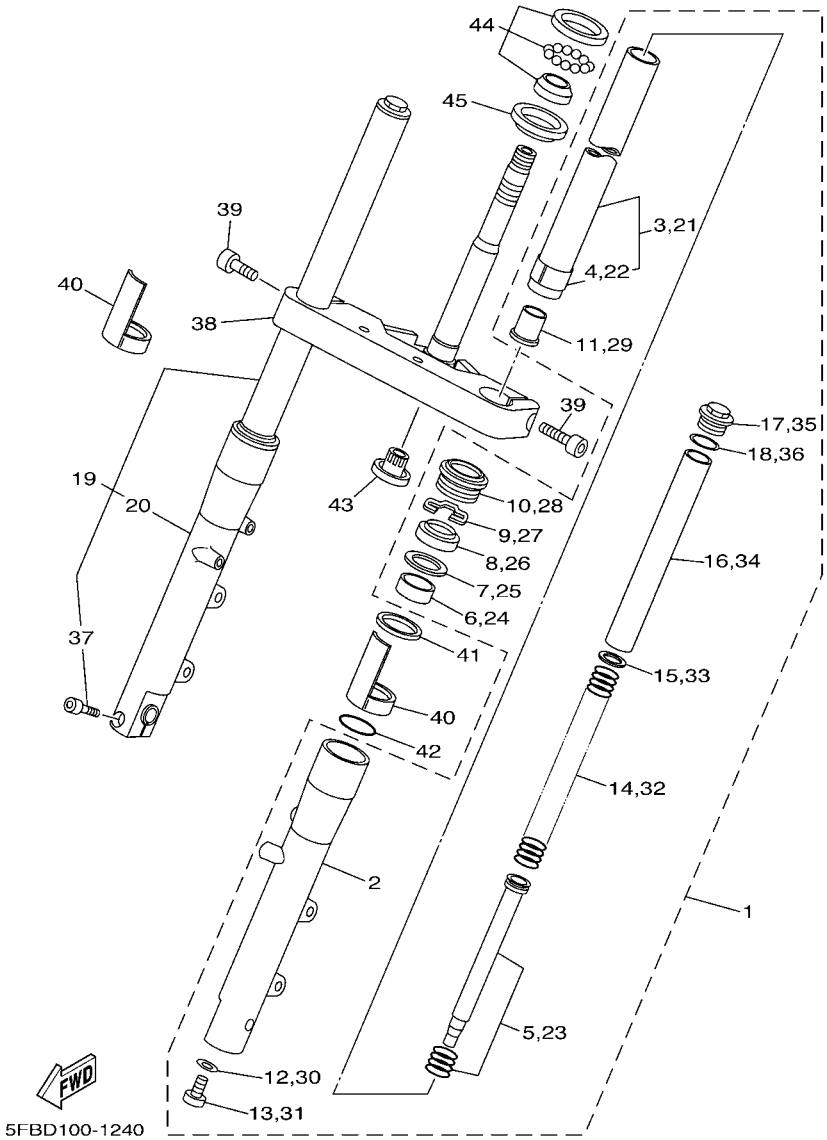

FIG. 24 FRONT FORK

REF. NO.	PART NO.	DESCRIPTION	5FBS	5FBT	5FBU			REMARKS
28	4EB–23144–00	.SEAL, DUST	1	1	1			
29	4YR–23173–00	.SPINDLE, TAPER	1	1	1			
30	509–23158–L0	.GASKET	1	1	1			
31	278–23181–50	.BOLT, HEXAGON SOCKET HEAD	1	1	1			
32	5KP–23141–00	.SPRING, FRONT FORK	1	1	1			
33	4DW–23149–40	.WASHER, SPRING UPPER	1	1	1			
34	4TR–23118–00	.SPACER	1	1	1			
35	1D0–23111–00	.BOLT, CAP	1	1	1			
36	43F–23188–10	.O-RING	1	1	1			
37	91314–08040	.BOLT	1	1	1			
38	5KP–23340–20	UNDER BRACKET COMP.	1	1	1			
39	91314–10030	BOLT	2	2	2			
40	5EL–2331G–00	COVER	2	2	2			
41	5EL–23376–00	STOPPER	2	2	2			
42	5EL–23147–00	O-RING	2	2	2			
43	4KM–23123–01	COVER, LOWER 1	1	1	1			
44	93399–99932	BEARING	1	1	1			
45	3FV–23462–00	SEAL, STEERING	1	1	1			

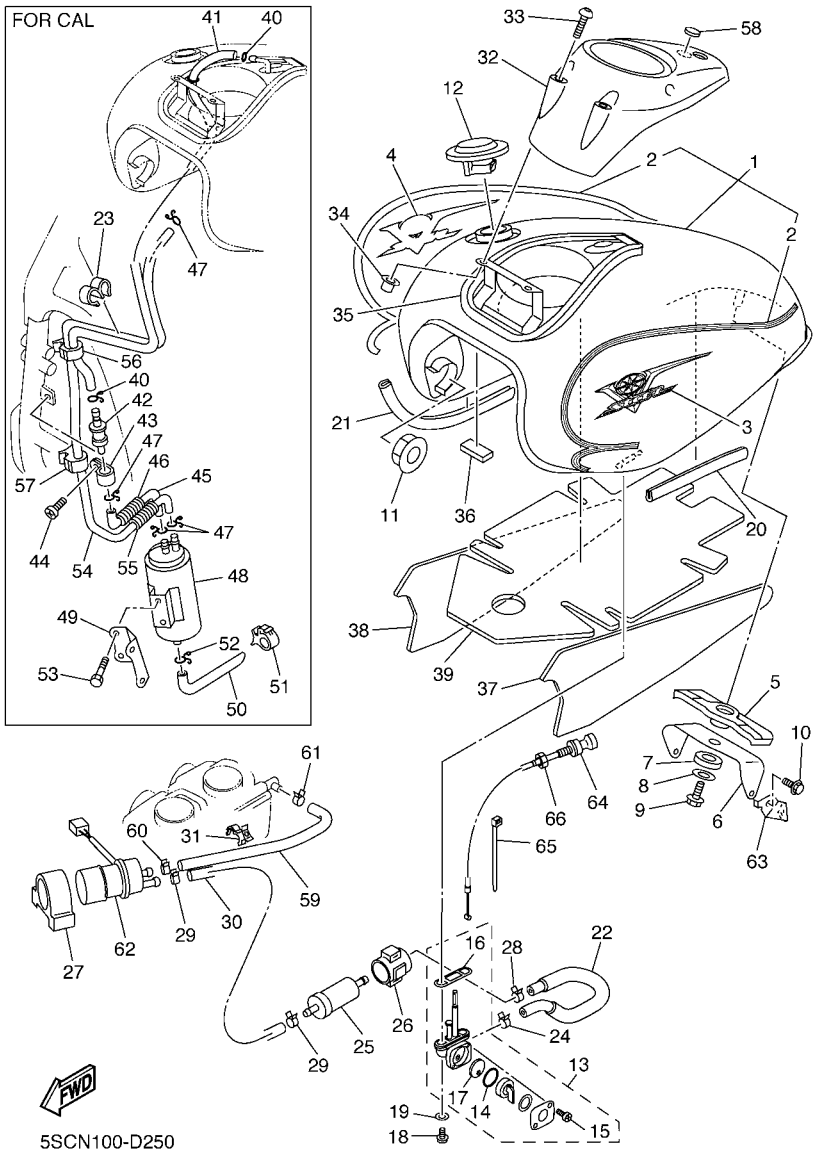

FIG. 25 FUEL TANK

REF. NO.	PART NO.	DESCRIPTION	5FBS	5FBT	5FBU			REMARKS
1	4TR–Y2410–U1–X7	FUEL TANK COMP.	1		1			SMX
	5SC–Y2410–10–06	FUEL TANK COMP.		1				SMX
2	5FB–24240–50	.GRAPHIC SET	1	1	1			
3	5FB–2416B–10	EMBLEM	1	1	1			
4	5FB–2417B–10	EMBLEM	1	1	1			
5	4TR–24182–00	DAMPER, LOCATING 2	1	1	1			
6	4TR–2413Y–00	BRACKET, TANK FITTING	1	1	1			
7	4TR–24183–00	DAMPER, LOCATING 3	1	1	1			
8	90209–06011	WASHER	1	1	1			
9	92017–06012	BOLT, BUTTON HEAD	1	1	1			
10	95817–08016	BOLT, FLANGE	2	2	2			
11	4H7–24181–00	DAMPER, LOCATING 1	2	2	2			
12	5BN–24602–00	CAP ASSY	1		1			
	4NK–24602–10	CAP ASSY		1				
13	21V–24500–11	FUEL COCK ASSY 1	1	1	1			
14	3AJ–24534–01	.SEAL, COCK	1	1	1			
15	98507–03008	.SCREW, PAN HEAD	2	2	2			
16	4X8–24512–00	.O-RING	1	1	1			
17	3AC–24523–00	.VALVE PACKING	1	1	1			
18	90149–06011	SCREW	2	2	2			
19	90202–05193	WASHER, PLATE	2	2	2			
20	1FK–2171L–00	MOLE, SIDE COVER 1	1	1	1			
21	4BP–24188–00	MOLD, FUEL TANK	1	1	1			
22	4TR–24313–00	PIPE 3	1	1	1			
23	90464–09M31	CLAMP		1				
24	90467–10038	CLIP	1	1	1			
25	1FK–24560–10	FILTER ASSY	1	1	1			

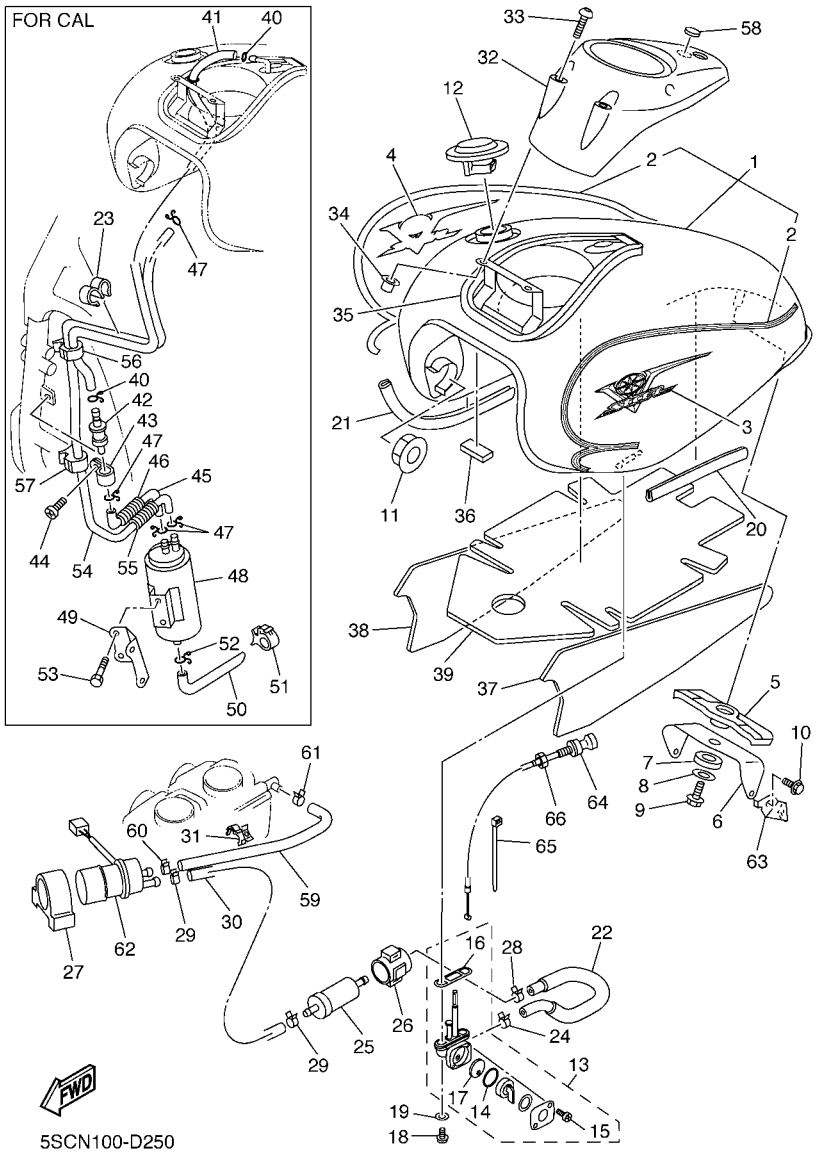

FIG. 25 FUEL TANK

REF. NO.	PART NO.	DESCRIPTION	5FBS	5FBT	5FBU			REMARKS
26	1FK–24566–00	BRACKET, FILTER	1	1	1			
27	4EB–24398–00	BAND 1	1	1	1			
28	90467–11032	CLIP	1	1	1			
29	90467–12053	CLIP	2	2	2			
30	4TR–24311–00	PIPE, FUEL 1	1	1	1			
31	90464–15192	CLAMP	1	1	1			
32	4TR–2171A–00	COVER, TOP	1	1	1			
33	90149–05299	SCREW	3	3	3			
34	90179–05523	NUT	3	3	3			
35	4TR–2414G–00	SEAL	2	2	2			
36	3XV–21717–00	DAMPER	1	1	1			
37	5SC–2414H–00	DAMPER, PLATE 1	1	1	1			
38	5SC–2414J–00	DAMPER, PLATE 2	1	1	1			
39	5SC–2414K–00	DAMPER, PLATE 3	1	1	1			
40	90467–10041	CLIP		2				
41	5BN–24312–01	PIPE 2		1				
42	5PX–24180–00	ROLL OVER VALVE ASSY		1				
43	90461–15139	CLAMP		1				
44	98907–05010	SCREW, BIND		1				
45	5BN–24314–01	PIPE 4		1				
46	5BN–24327–00	PROTECTOR, PIPE		1				
47	90467–10041	CLIP		4				
48	2JU–24170–00	CANISTER ASSY		1				
49	5BN–2419F–00	BRACKET, CANISTOR		1				
50	5BN–24315–00	PIPE 5		1				
51	90464–15192	CLAMP		1				
52	90467–10041	CLIP		1				

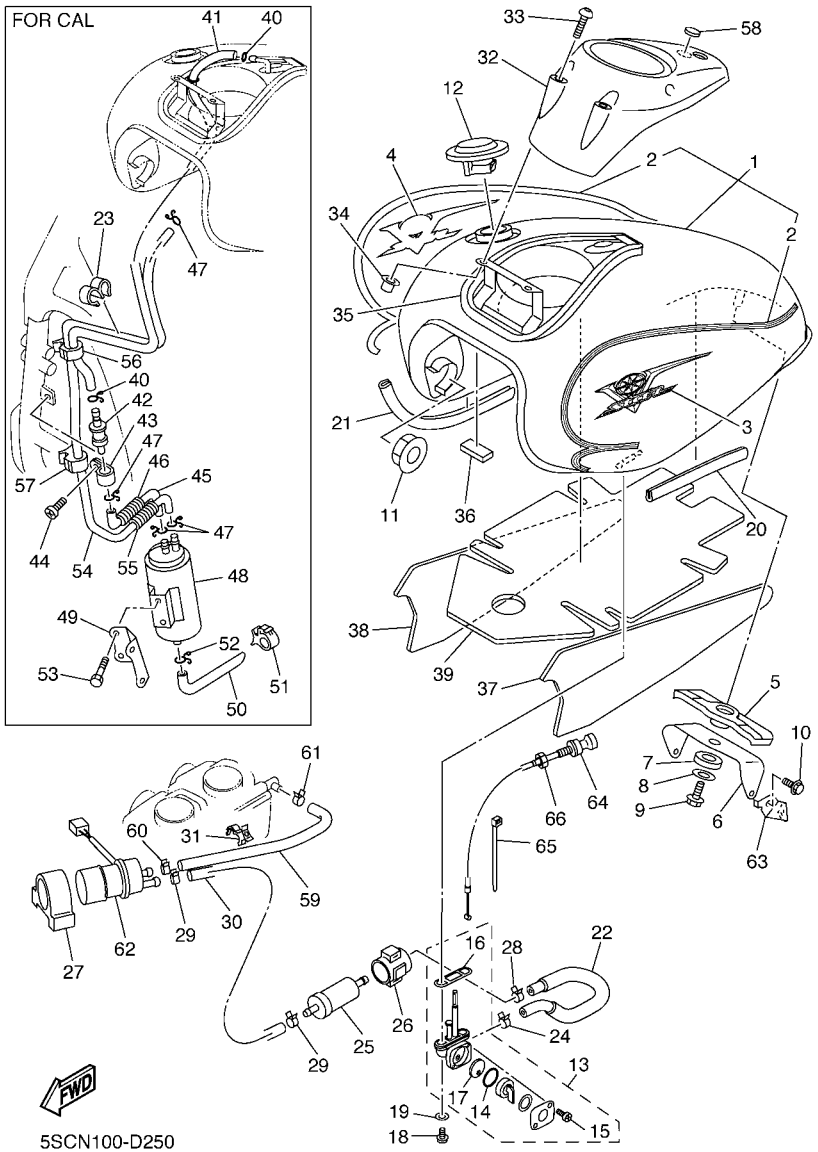

FIG. 25 FUEL TANK

REF. NO.	PART NO.	DESCRIPTION	5FBS	5FBT	5FBU			REMARKS
53	95807–06010	BOLT, FLANGE		2				
54	5BN–24313–00	PIPE 3		1				
55	5BN–24327–00	PROTECTOR, PIPE		1				
56	90464–20191	CLAMP		1				
57	90464–15192	CLAMP		1				
58	4TR–2413B–00	EMBLEM	1	1	1			
59	4TR–14294–00	HOSE	1	1	1			
60	90467–12053	CLIP	1	1	1			
61	90467–12124	CLIP	1	1	1			
62	5KS–13907–00	FUEL PUMP COMP.	1	1	1			
63	4TR–2637G–00	HOLDER, WIRE	1	1	1			
64	4TR–26331–00	CABLE, STARTER 1	1	1	1			
65	1UA–82591–00	BAND	1	1	1			
66	1VJ–26333–00	NUT	1	1	1			

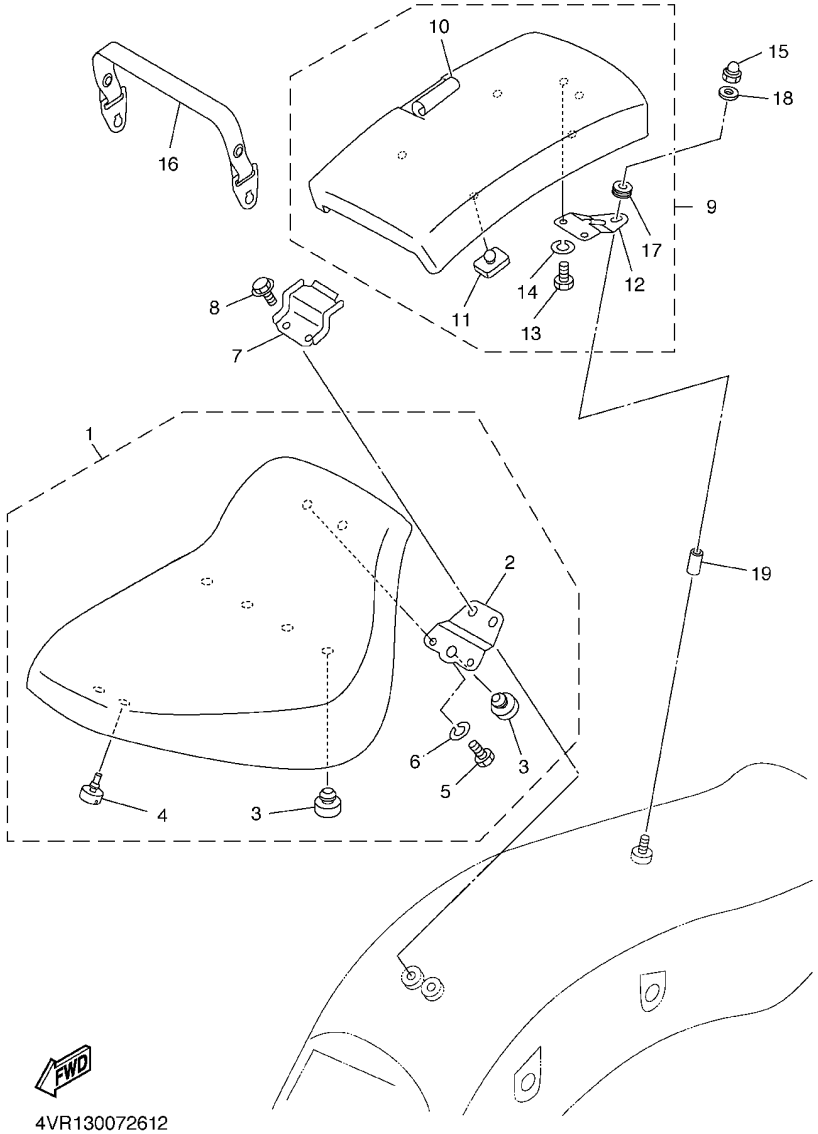

4VR130072612

FIG. 26 SEAT

REF. NO.	PART NO.	DESCRIPTION	5FBS	5FBT	5FBU			REMARKS
1	4VR–24710–20	SINGLE SEAT ASSY	1	1	1			
2	4TR–2475H–00	.BRACKET, SEAT LEVER 1	1	1	1			
3	22W–24741–00	.PAD, SEAT	5	5	5			
4	35T–24724–00	.DAMPER, SEAT	2	2	2			
5	97007–06012	.BOLT	2	2	2			
6	92907–06100	.WASHER, SPRING	2	2	2			
7	4TR–2475K–00	BRACKET 3	1	1	1			
8	91317–06025	BOLT	2	2	2			
9	4TR–24750–10	TANDEM SEAT ASSY	1	1	1			
10	4TR–24751–10	.COVER, TANDEM SEAT	1	1	1			
11	509–24724–00	.DAMPER, SEAT	4	4	4			
12	4TR–2475J–00	.BRACKET, SEAT LEVER 2	1	1	1			
13	97007–06012	.BOLT	2	2	2			
14	92907–06100	.WASHER, SPRING	2	2	2			
15	90176–06047	NUT,CAP	1	1	1			
16	4TR–24720–00	SEAT BAND ASSY	1	1	1			

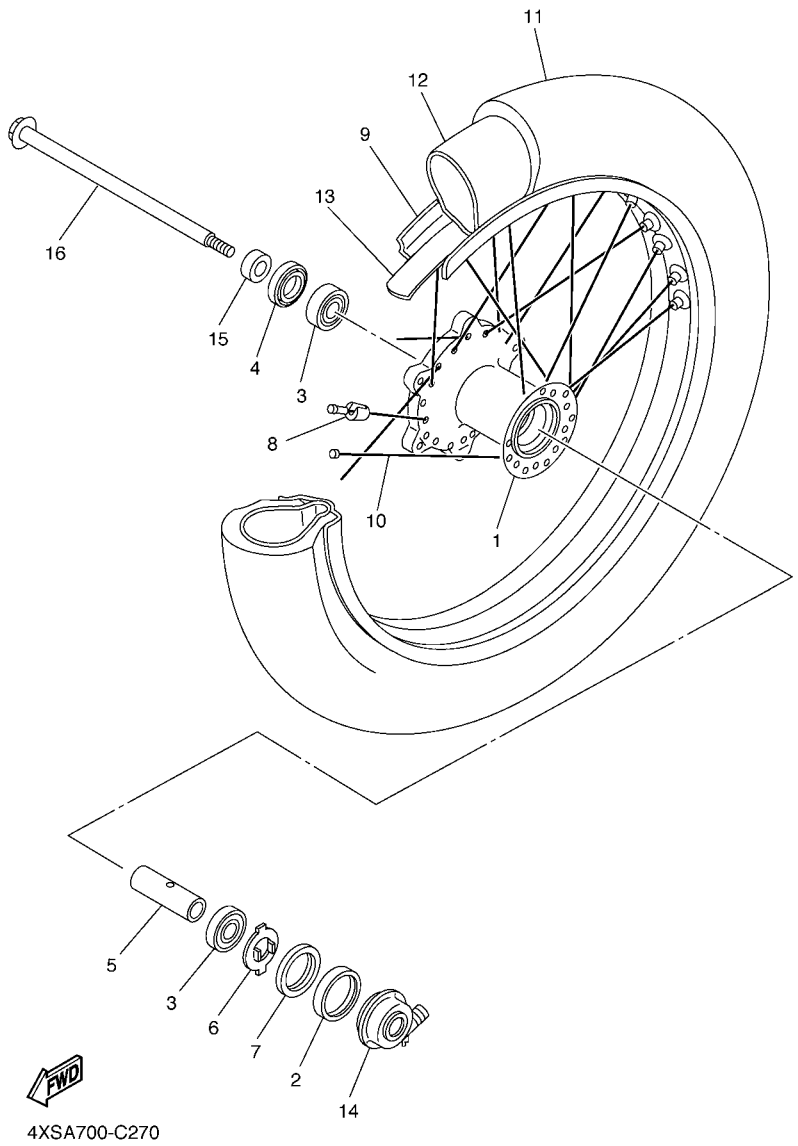

FIG. 27 FRONT WHEEL

REF. NO.	PART NO.	DESCRIPTION	5FBS	5FBT	5FBU			REMARKS
1	4TR–25111–00	HUB, FRONT	1	1	1			
2	93105–45017	OIL SEAL	1	1	1			
3	93306–30317	BEARING	2	2	2			
4	93102–28022	OIL SEAL	1	1	1			
5	90387–173M5	COLLAR	1	1	1			
6	341–25149–00	CLUTCH, METER	1	1	1			
7	341–25846–00	RETAINER, CLUTCH	1	1	1			
8	3HT–25398–00	BALANCER, WHEEL (15G)	1	1	1			UN
9	94425–19585	RIM (19M/C X MT2.50)	1	1	1			
10	4VR–25104–02	SPOKE SET, FRONT	1	1	1			
11	94110–1908V	TIRE (100/90-19 M/C 57S F24)	1	1	1			UR DUNLOP
	94110–1908T	TIRE (100/90-19 M/C 57S L309)	1	1	1			UR BRIDGESTONE
12	94210–19224	TUBE (100/90-19 M/C TR4 BTL)	1	1	1			UR DUNLOP
	94210–19222	TUBE (100/90-19 M/C TR4)	1	1	1			UR BRIDGESTONE
13	94321–19135	BAND, RIM (1.85-19)	1	1	1			UR DUNLOP
	94321–19157	BAND, RIM (2.15-19)	1	1	1			UR BRIDGESTONE
14	4TR–25190–20	GEAR UNIT ASSY	1	1	1			
15	90387–173R6	COLLAR	1	1	1			
16	5KS–25181–00	AXLE, WHEEL	1	1	1			

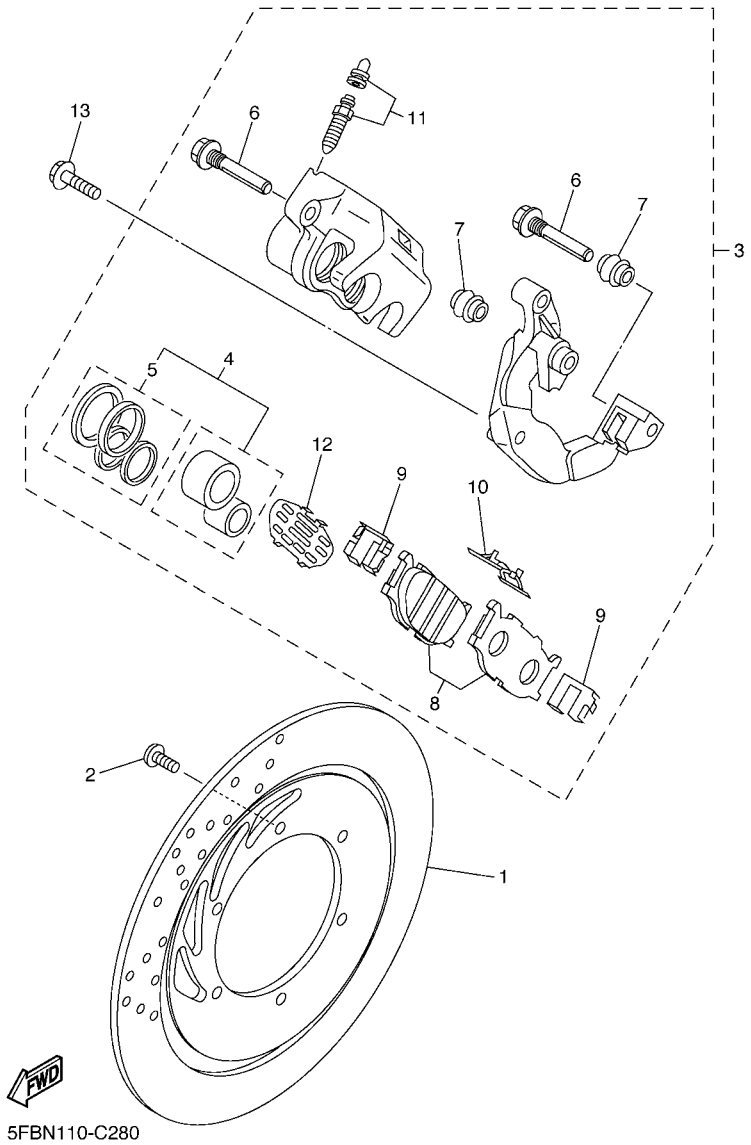

FIG. 28 FRONT BRAKE CALIPER

REF. NO.	PART NO.	DESCRIPTION	5FBS	5FBT	5FBU			REMARKS
1	5BN–2582U–00	DISK, BRAKE (RIGHT)	1	1	1			
2	90109–083G4	BOLT	6	6	6			
3	4WM–2580U–20	CALIPER ASSY (RIGHT)	1	1	1			
4	3JB–W0057–00	.PISTON ASSY, CALIPER	1	1	1			
5	3JB–W0047–00	..CALIPER SEAL KIT	1	1	1			
6	5JW–25914–10	.PIN, SLIDE	2	2	2			
7	4TT–25937–00	.BOOT 2	2	2	2			
8	4WM–W0045–00	.BRAKE PAD KIT	1	1	1			
9	4BP–25919–00	.SUPPORT, PAD	2	2	2			
10	3YX–25929–00	.SPRING, ANTI RATTLE	1	1	1			
11	51L–W0048–00	.BLEED SCREW KIT	1	1	1			
12	5BN–25827–00	.SHIM, CALIPER	1	1	1			
13	90105–10638	BOLT, FLANGE	2	2	2			

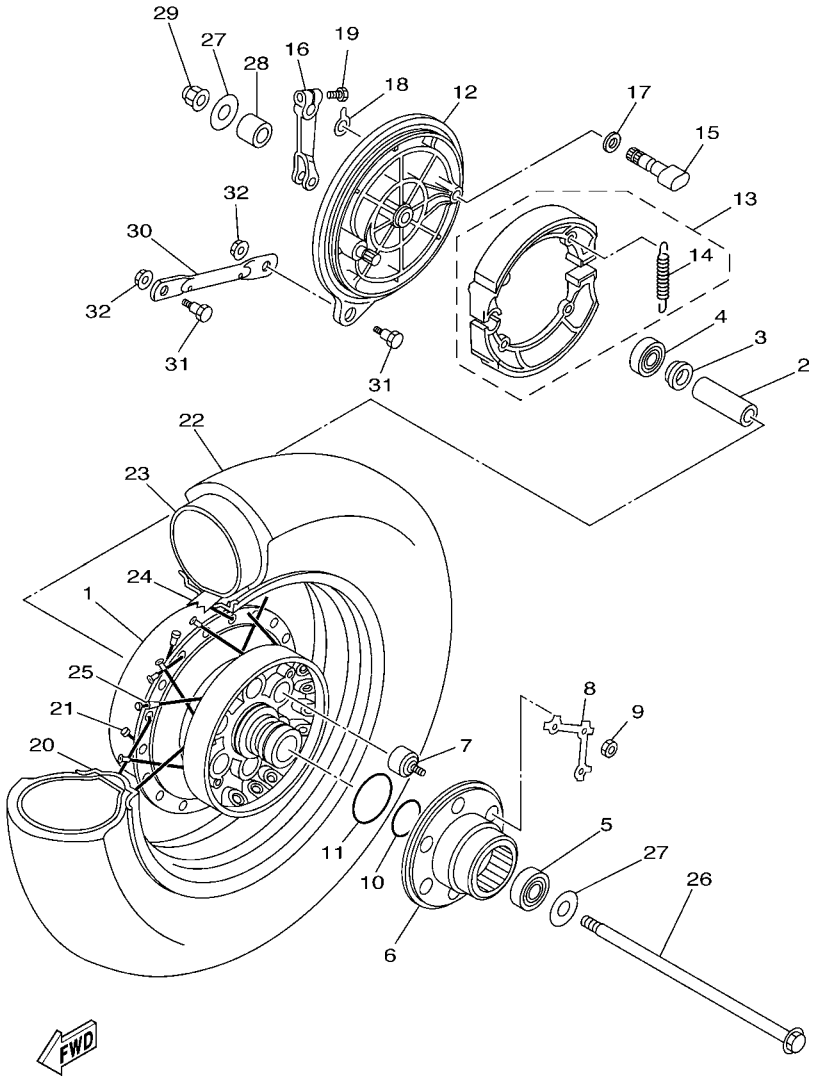

5BNV300-1290

FIG. 29 REAR WHEEL

REF. NO.	PART NO.	DESCRIPTION	5FBS	5FBT	5FBU			REMARKS
1	3JB–25311–00–35	HUB, REAR	1	1	1			SL
2	2GV–25317–00	SPACER, BEARING	1	1	1			
3	2GV–25315–00	FLANGE, SPACER	1	1	1			
4	93306–30213	BEARING	1	1	1			
5	93306–30212	BEARING	1	1	1			
6	4TR–25366–00	CLUTCH, HUB	1	1	1			
7	4TR–25364–00	DAMPER	6	6	6			
8	16G–25412–00	WASHER	2	2	2			
9	90170–10219	NUT	6	6	6			
10	93210–48530	O-RING	1	1	1			
11	93210–61750	O-RING	1	1	1			
12	4TR–25321–00	PLATE, BRAKE SHOE	1	1	1			
13	3DR–W253E–00	BRAKE SHOE KIT	1	1	1			
14	90507–20002	.SPRING, TENSION	2	2	2			
15	4H7–25351–00	CAMSHAFT	1	1	1			
16	214–25355–00	LEVER, CAMSHAFT	1	1	1			
17	90201–14577	WASHER, PLATE	1	1	1			
18	4H7–2533A–02	PLATE, INDICATOR	1	1	1			
19	90101–06764	BOLT	1	1	1			
20	94435–15586	RIM (15M/C X MT3.50)	1	1	1			
21	4VR–25304–02	SPOKE SET, REAR	1	1	1			
22	94117–1508W	TIRE (170/80-15 M/C 77S K555)	1	1	1			UR DUNLOP
	94117–1508U	TIRE (170/80-15 M/C 77S G546)	1	1	1			UR BRIDGESTONE
23	94217–15299	TUBE (170/80-15 M/C PV78)	1	1	1			UR DUNLOP
	94217–15298	TUBE (170/80-15 M/C PV78)	1	1	1			UR BRIDGESTONE
24	94317–15173	BAND,RIM (170/80-15)	1	1	1			UR DUNLOP
	94317–15172	BAND,RIM (3.00-15)	1	1	1			UR BRIDGESTONE

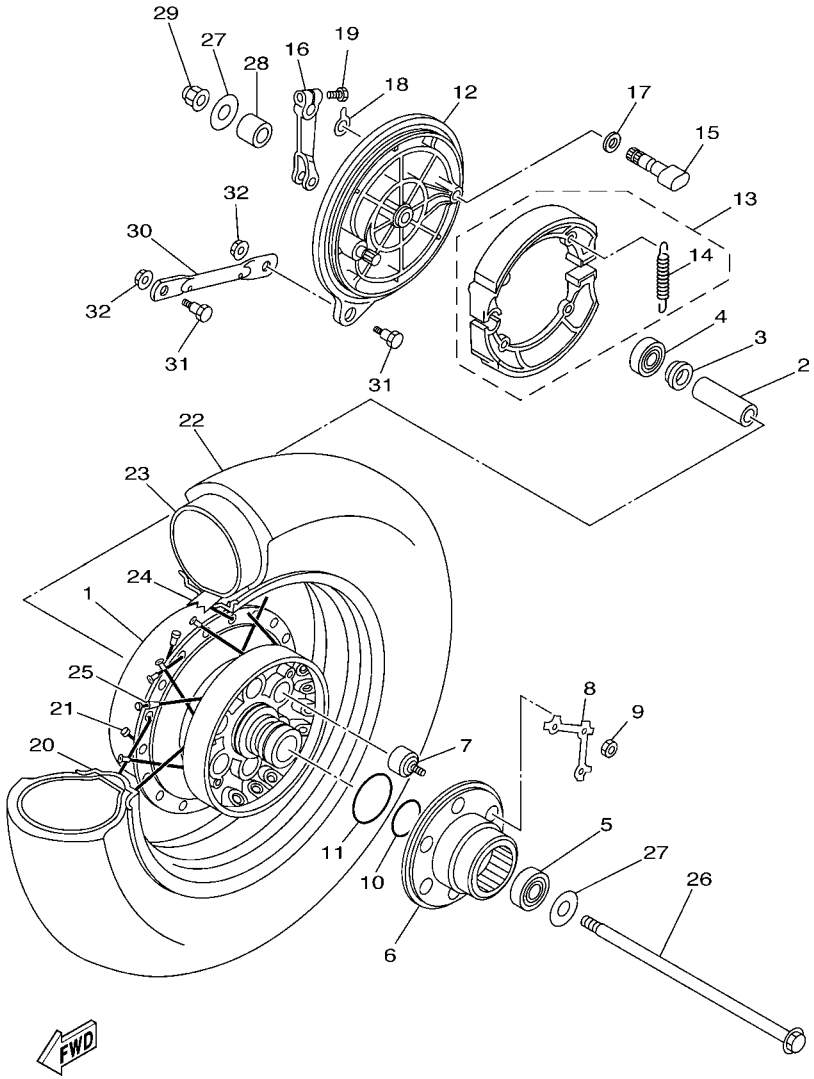

5BNV300-1290

FIG. 29 REAR WHEEL

REF. NO.	PART NO.	DESCRIPTION	5FBS	5FBT	5FBU			REMARKS
25	3HT–25398–00	BALANCER, WHEEL (15G)	1	1	1			UN
26	4TR–25381–00	AXLE, WHEEL	1	1	1			
27	90201–152L7	WASHER, PLATE	2	2	2			
28	90387–151R1	COLLAR	1	1	1			
29	95604–14200	NUT, SELF-LOCKING	1	1	1			
30	4TR–25371–00	BAR, TENSION	1	1	1			
31	90109–085G1	BOLT	2	2	2			
32	95604–08200	NUT, U FLANGE	2	2	2			

FIG. 30 STEERING HANDLE & CABLE

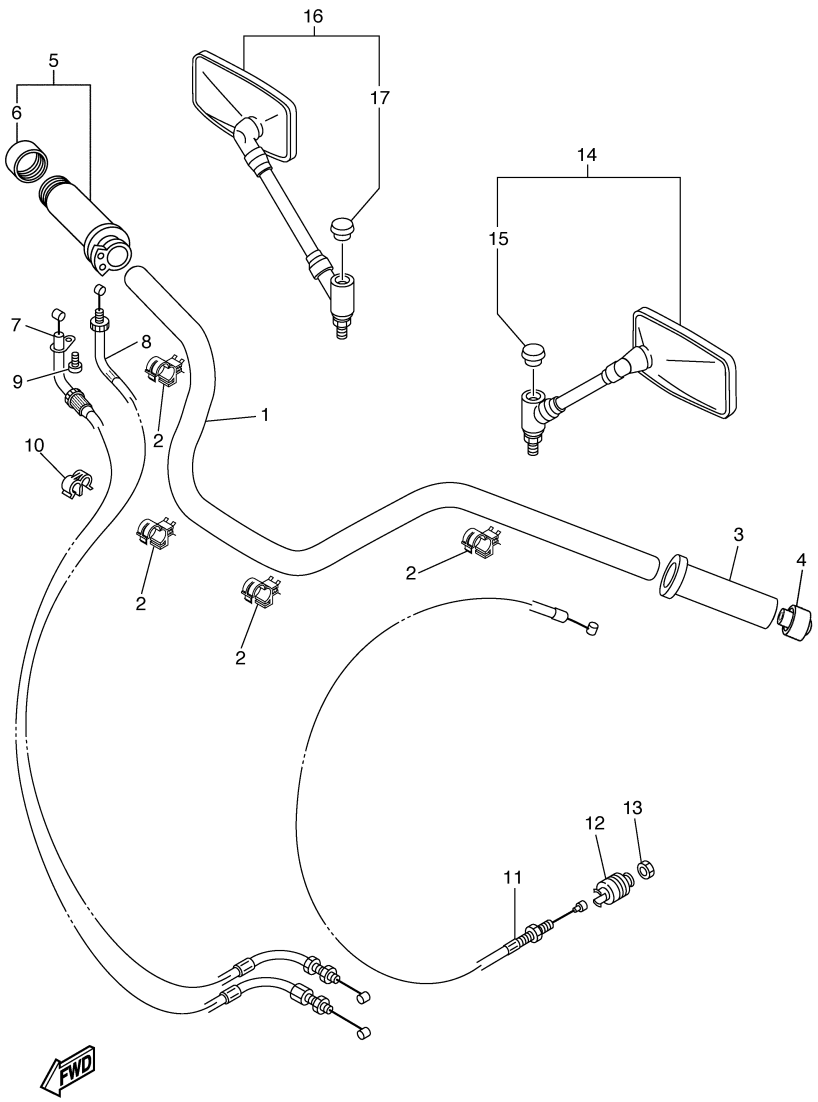

5FBS100-D301

REF. NO.	PART NO.	DESCRIPTION	5FBS	5FBT	5FBU			REMARKS
1	4VR–26111–20	HANDLEBAR	1	1	1			
2	90464–15192	CLAMP	4	4	4			
3	4NK–26241–00	GRIP(LEFT)	1	1	1			
4	4NK–2628J–00	CAP, GRIP	1	1	1			
5	4NK–26240–00	GRIP ASSY	1	1	1			
6	4NK–2635J–00	.CAP 2	1	1	1			
7	5KP–26311–10	CABLE, THROTTLE 1	1	1	1			
8	5KP–26312–10	CABLE, THROTTLE 2	1	1	1			
9	98507–05008	SCREW, PAN HEAD	1	1	1			
10	90464–06214	CLAMP	1	1	1			
11	5KP–26335–00	CABLE, CLUTCH	1	1	1			
12	1E6–26342–00	BOOT, CABLE	1	1	1			
13	95304–08700	NUT	1	1	1			
14	4VR–26280–02	REAR VIEW MIRROR ASSY (LEFT)	1	1	1			
15	5PS–26133–01	.CAP	1	1	1			
16	4VR–26290–02	REAR VIEW MIRROR ASSY (RIGHT)	1	1	1			
17	5PS–26133–01	.CAP	1	1	1			

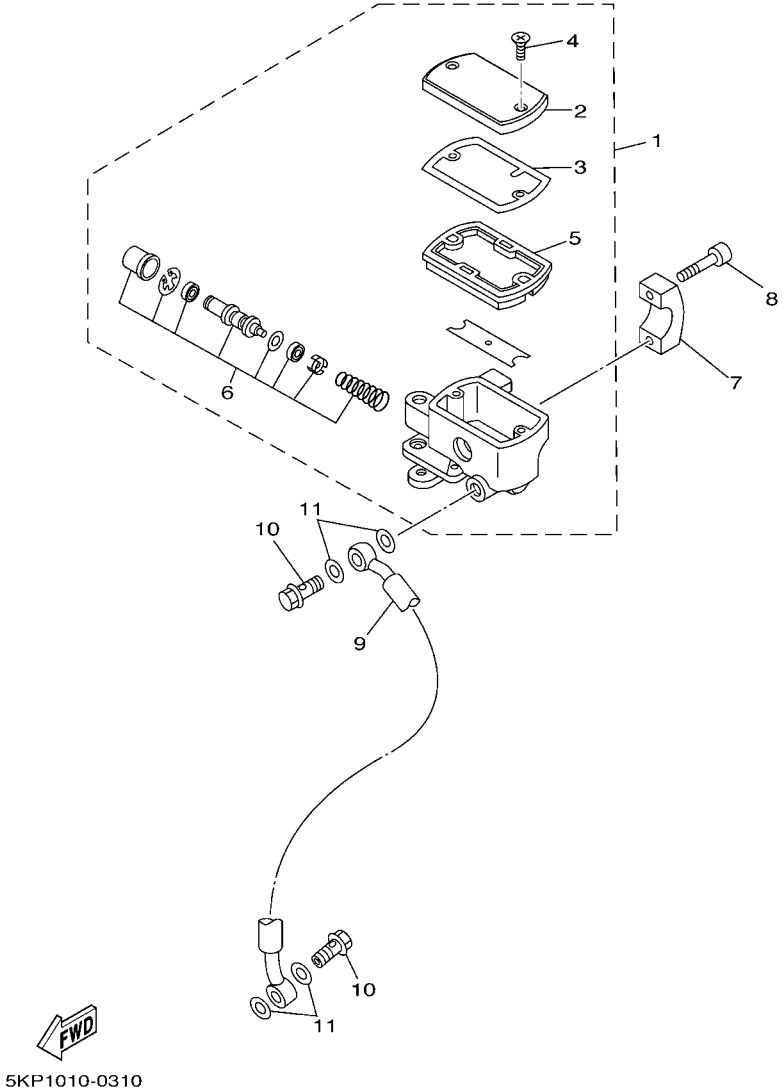

FIG. 31 FRONT MASTER CYLINDER

REF. NO.	PART NO.	DESCRIPTION	5FBS	5FBT	5FBU			REMARKS
1	4TR–25870–10	MASTER CYLINDER SUB ASSY	1	1	1			
2	4TR–25852–10	.CAP, RESERVOIR	1	1	1			
3	4BH–25815–00	.SEAL, PISTON	1	1	1			
4	36Y–2589H–00	.SCREW	2	2	2			
5	4BH–25854–02	.DIAPHRAGM, RESERVOIR	1	1	1			
6	2KR–W0041–00	.CYLINDER KIT, MASTER	1	1	1			
7	4TR–25867–10	BRACKET, MASTER CYLINDER	1	1	1			
8	91314–06025	BOLT	2	2	2			
9	5KP–25872–10	HOSE, BRAKE 1	1	1	1			
10	90401–10159	BOLT, UNION	2	2	2			
11	90201–10118	WASHER, PLATE	4	4	4			

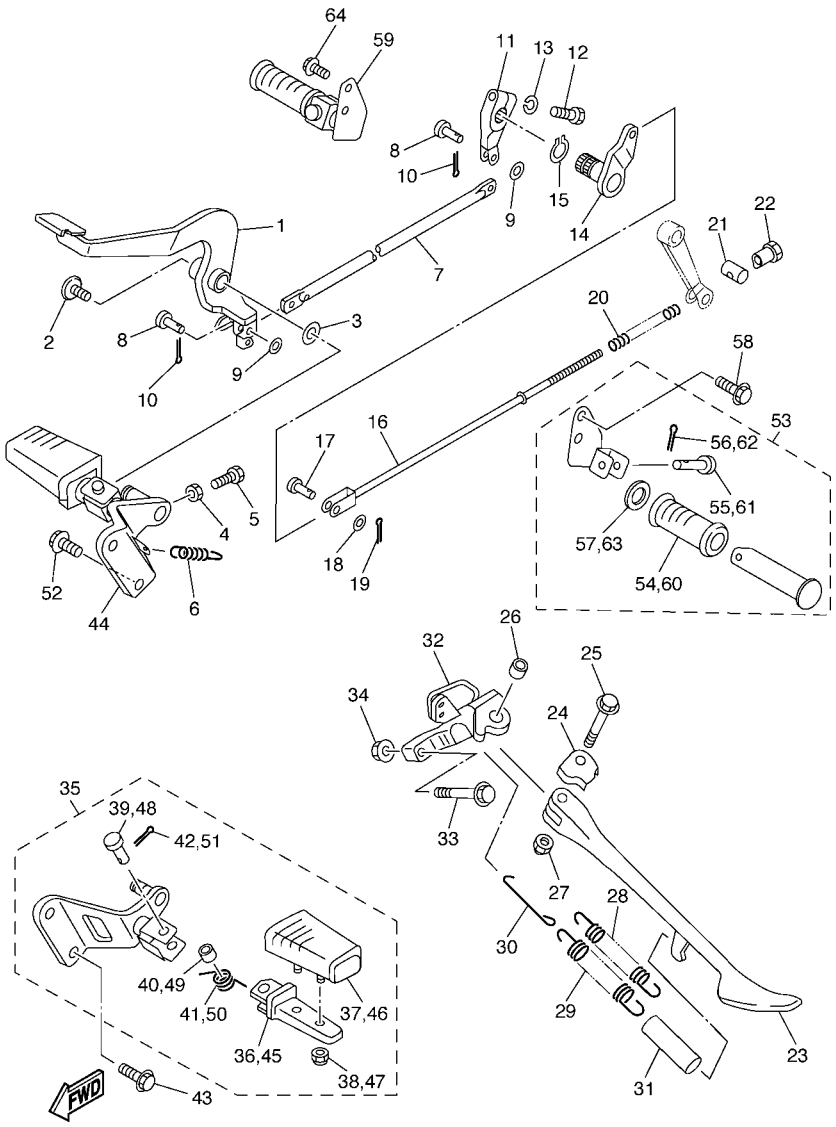

4XSA700-C320

FIG. 32 STAND & FOOTREST

REF. NO.	PART NO.	DESCRIPTION	5FBS	5FBT	5FBU			REMARKS
1	5KP–27211–00	PEDAL, BRAKE	1	1	1			
2	90110–06249	BOLT, HEXAGON SOCKET HEAD	1	1	1			
3	90206–14086	WASHER, WAVE	1	1	1			
4	95307–06700	NUT	1	1	1			
5	90101–06534	BOLT	1	1	1			
6	90506–20193	SPRING, TENSION	1	1	1			
7	5KP–27247–00	ROD 1	1	1	1			
8	90240–06108	PIN, CLEVIS	2	2	2			
9	90201–062P7	WASHER, PLATE	2	2	2			
10	91401–20012	PIN, COTTER	2	2	2			
11	4TR–27243–00	BOSS, BRAKE PEDAL	1	1	1			
12	90109–06468	BOLT	1	1	1			
13	92907–06100	WASHER, SPRING	1	1	1			
14	4TR–27212–00	SHAFT, BRAKE PEDAL	1	1	1			
15	99009–19400	CIRCLIP	1	1	1			
16	4TR–27231–00	ROD, BRAKE	1	1	1			
17	90240–06108	PIN, CLEVIS	1	1	1			
18	90201–062P7	WASHER, PLATE	1	1	1			
19	91401–20012	PIN, COTTER	1	1	1			
20	90501–10245	SPRING, COMPRESSION	1	1	1			
21	90249–12008	PIN	1	1	1			
22	90179–06411	NUT	1	1	1			
23	4KU–27311–13	STAND, SIDE	1	1	1			
24	5KP–27322–00	WASHER	1	1	1			
25	90105–102A6	BOLT, FLANGE	1	1	1			
26	90387–1003G	COLLAR	1	1	1			
27	95607–10200	NUT, U FLANGE	1	1	1			

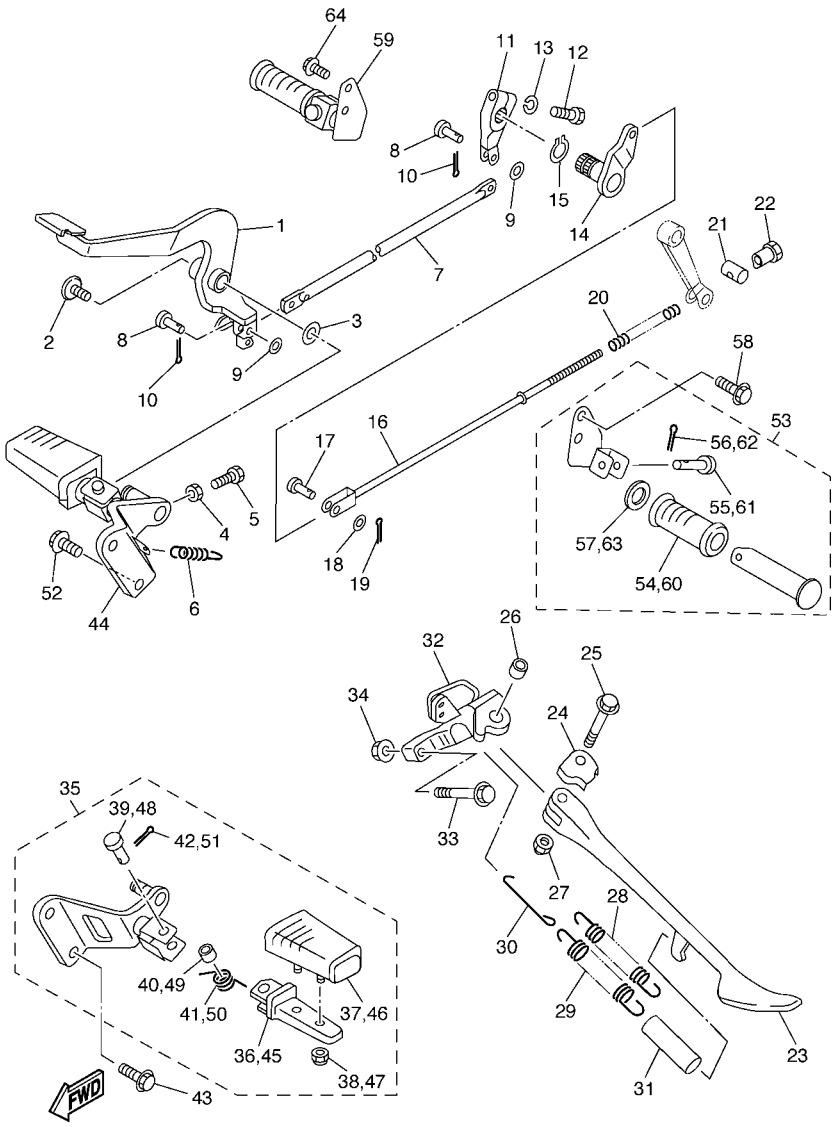

4XSA700-C320

FIG. 32 STAND & FOOTREST

REF. NO.	PART NO.	DESCRIPTION	5FBS	5FBT	5FBU			REMARKS
28	90506–23490	SPRING, TENSION	1	1	1			
29	90506–29507	SPRING, TENSION	1	1	1			
30	5EL–27315–00	LINK, SIDE STAND	1	1	1			
31	90445–16641	HOSE (L60)	1	1	1			
32	5KP–27321–00	BRACKET, SIDE STAND	1	1	1			
33	90105–10727	BOLT, FLANGE	2	2	2			
34	95607–10200	NUT, U FLANGE	2	2	2			
35	5KP–27410–00	FRONT FOOTREST ASSY (LEFT)	1	1	1			
36	1NH–27451–00	.FOOTREST	1	1	1			
37	4VR–27413–00	.COVER, FOOTREST	1	1	1			
38	95607–06100	.NUT, U	2	2	2			
39	90240–08084	.PIN, CLEVIS	1	1	1			
40	90387–087K5	.COLLAR	1	1	1			
41	90508–18696	.SPRING, TORSION	1	1	1			
42	91401–25015	.PIN, COTTER	1	1	1			
43	90105–102A3	BOLT, FLANGE	2	2	2			
44	5KP–27420–00	FRONT FOOTREST ASSY (RIGHT)	1	1	1			
45	1NH–27461–00	.FOOTREST	1	1	1			
46	4VR–27413–00	.COVER, FOOTREST	1	1	1			
47	95607–06100	.NUT, U	2	2	2			
48	90240–08084	.PIN, CLEVIS	1	1	1			
49	90387–087K5	.COLLAR	1	1	1			
50	90508–18696	.SPRING, TORSION	1	1	1			
51	91401–25015	.PIN, COTTER	1	1	1			
52	90105–102A3	BOLT, FLANGE	2	2	2			
53	4TR–27430–10	REAR FOOTREST ASSY 1	1	1	1			
54	120–27433–00	.COVER, REAR FOOTREST	1	1	1			

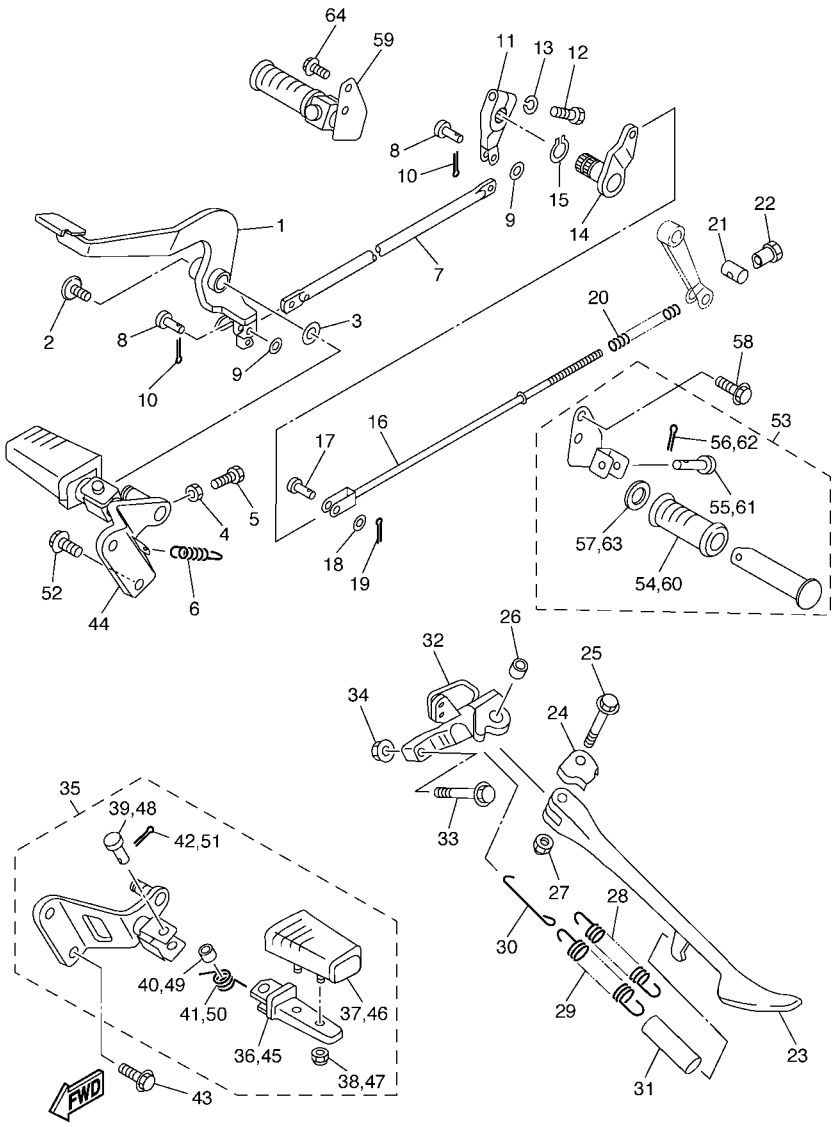

4XSA700-C320

FIG. 32 STAND & FOOTREST

REF. NO.	PART NO.	DESCRIPTION	5FBS	5FBT	5FBU			REMARKS
55	91701–06032	.PIN, CLEVIS	1	1	1			
56	91401–20015	.PIN, COTTER	1	1	1			
57	90201–20279	.WASHER, PLATE	1	1	1			
58	90105–082A5	BOLT, FLANGE	2	2	2			
59	4TR–27440–10	REAR FOOTREST ASSY 2	1	1	1			
60	120–27433–00	.COVER, REAR FOOTREST	1	1	1			
61	91701–06032	.PIN, CLEVIS	1	1	1			
62	91401–20015	.PIN, COTTER	1	1	1			
63	90201–20279	.WASHER, PLATE	1	1	1			
64	90105–082A5	BOLT, FLANGE	2	2	2			

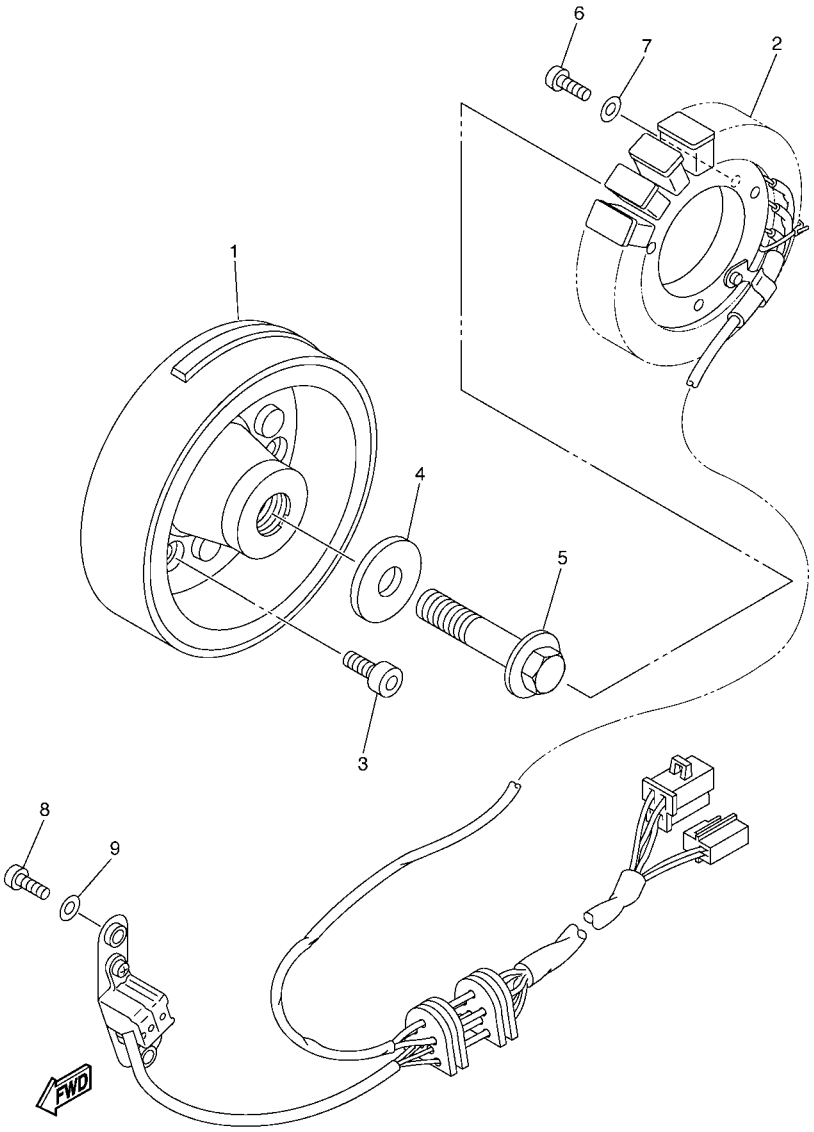

FIG. 33 GENERATOR

REF. NO.	PART NO.	DESCRIPTION	5FBS	5FBT	5FBU			REMARKS
1	4VR–81450–00	ROTOR ASSY	1	1	1			
2	5SC–81410–00	STATOR ASSY	1	1	1			
3	90110–08212	BOLT, HEXAGON SOCKET HEAD	6	6	6			
4	90201–107E9	WASHER, PLATE	1	1	1			
5	90105–10152	BOLT, FLANGE	1	1	1			
6	98507–06030	SCREW, PAN HEAD	3	3	3			
7	92907–06600	WASHER, PLATE	3	3	3			
8	98507–06020	SCREW, PAN HEAD	3	3	3			
9	92907–06600	WASHER, PLATE	3	3	3			

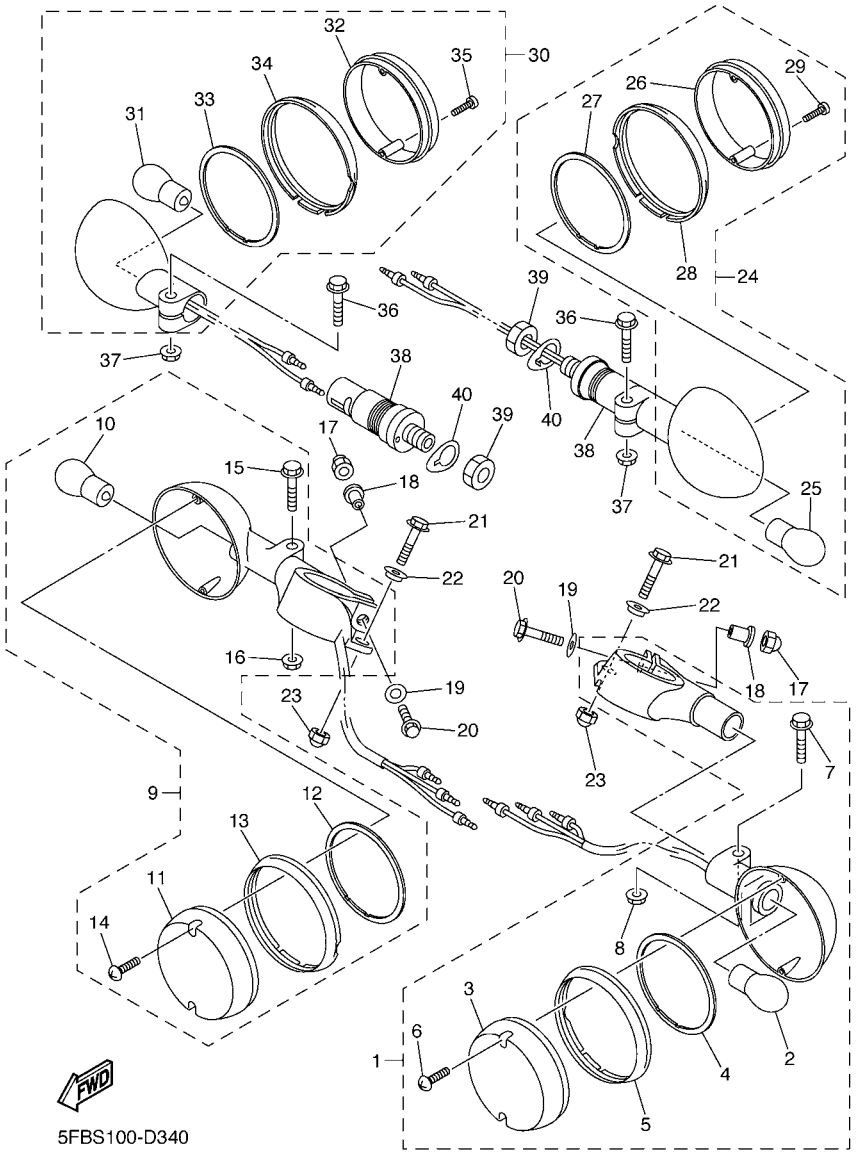

FIG. 34 FLASHER LIGHT

REF. NO.	PART NO.	DESCRIPTION	5FBS	5FBT	5FBU			REMARKS
1	5PB–83310–10	FRONT FLASHER LIGHT ASSY 1	1	1	1			
2	5VN–83311–00	.BULB, FLASHER (12V-23/8W)	1	1	1			
3	5VN–83312–10	.LENS, FLASHER	1	1	1			
4	1D6–83313–00	.GASKET, FLASHER LENS	1	1	1			
5	1D6–83363–00	.LENS, RIM	1	1	1			
6	57M–83358–00	.SCREW, SPECIAL	2	2	2			
7	95024–06030	.BOLT, FLANGE	1	1	1			
8	95704–06500	.NUT, FLANGE	1	1	1			
9	5PB–83320–10	FRONT FLASHER LIGHT ASSY 2	1	1	1			
10	5VN–83311–00	.BULB, FLASHER (12V-23/8W)	1	1	1			
11	5VN–83312–20	.LENS, FLASHER	1	1	1			
12	1D6–83313–00	.GASKET, FLASHER LENS	1	1	1			
13	1D6–83363–10	.LENS, RIM	1	1	1			
14	57M–83358–00	.SCREW, SPECIAL	2	2	2			
15	95024–06030	.BOLT, FLANGE	1	1	1			
16	95704–06500	.NUT, FLANGE	1	1	1			
17	90176–06055	NUT, CROWN	2	2	2			
18	90387–06076	COLLAR	2	2	2			
19	90201–06045	WASHER, PLATE	2	2	2			
20	95807–06025	BOLT, FLANGE	2	2	2			
21	95027–06030	BOLT, FLANGE	2	2	2			
22	90560–06244	SPACER	2	2	2			
23	95304–06800	NUT, CROWN	2	2	2			
24	1D6–83330–00	REAR FLASHER LIGHT ASSY 1	1	1	1			
25	5VN–83311–10	.BULB, FLASHER (12V-21W)	1	1	1			
26	1D6–83312–20	.LENS, FLASHER	1	1	1			
27	1D6–83313–00	.GASKET, FLASHER LENS	1	1	1			

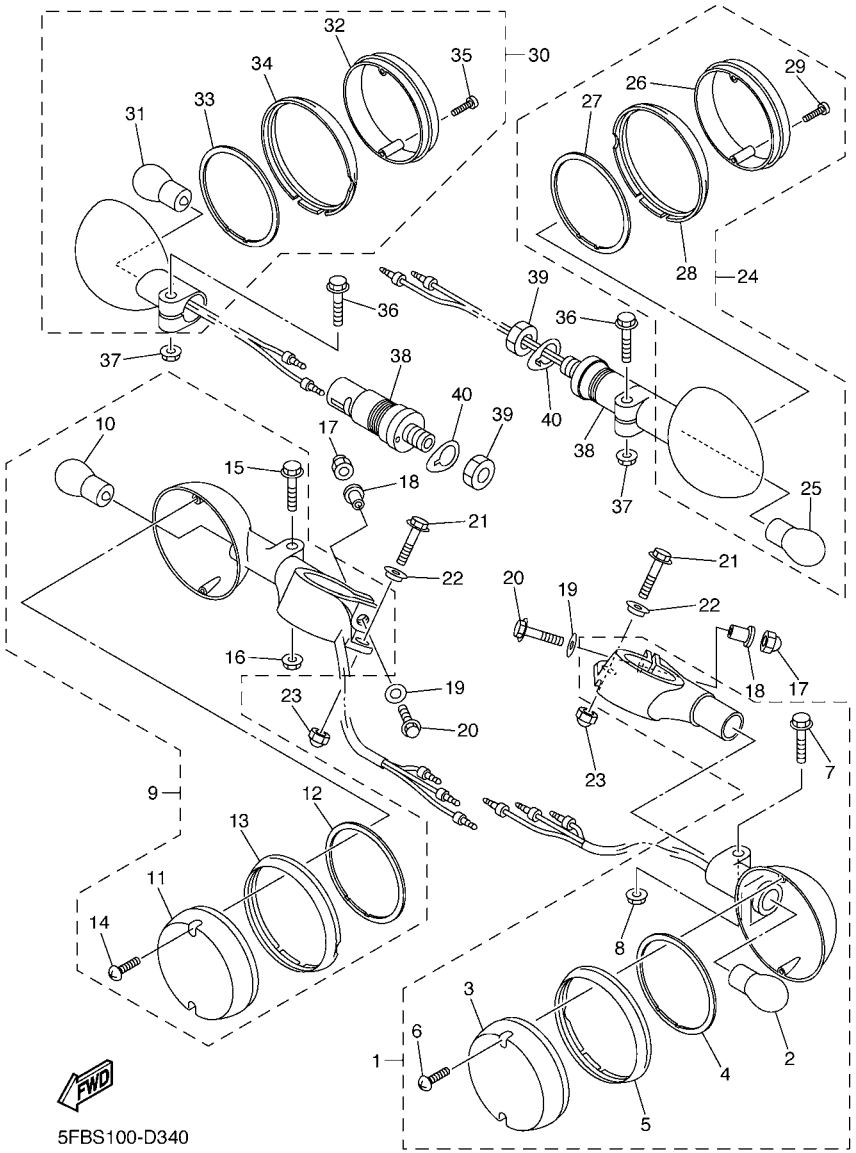

FIG. 34 FLASHER LIGHT

REF. NO.	PART NO.	DESCRIPTION	5FBS	5FBT	5FBU			REMARKS
28	1D6–83363–10	.LENS, RIM	1	1	1			
29	57M–83358–00	.SCREW, SPECIAL	2	2	2			
30	1D6–83340–00	REAR FLASHER LIGHT ASSY 2	1	1	1			
31	5VN–83311–10	.BULB, FLASHER (12V-21W)	1	1	1			
32	1D6–83312–10	.LENS, FLASHER	1	1	1			
33	1D6–83313–00	.GASKET, FLASHER LENS	1	1	1			
34	1D6–83363–00	.LENS, RIM	1	1	1			
35	57M–83358–00	.SCREW, SPECIAL	2	2	2			
36	95024–06030	BOLT, FLANGE	2	2	2			
37	95704–06500	NUT, FLANGE	2	2	2			
38	1AA–83318–00	STAY, FLASHER 1	2	2	2			
39	95307–12700	NUT	2	2	2			
40	4TR–83348–00	WASHER	2	2	2			

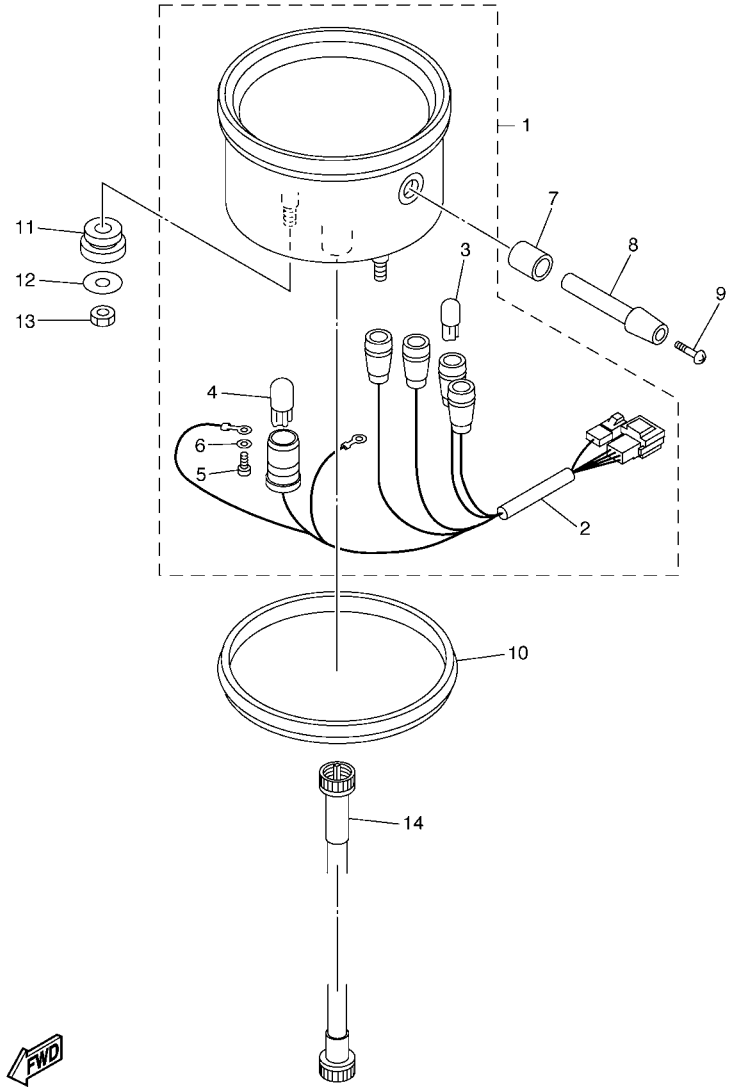

5FBN100-C350

FIG. 35 METER

REF. NO.	PART NO.	DESCRIPTION	5FBS	5FBT	5FBU			REMARKS
1	4VR–83580–40	SPEEDOMETER ASSY (MPH)	1	1				
	4VR–83580–50	SPEEDOMETER ASSY (KM/H)			1			
2	5SC–83520–20	.SOCKET CORD ASSY	1	1	1			
3	2GV–83517–00	.BULB (12V-1.7W T6.5)	4	4	4			
4	1YT–83517–00	.BULB (12V-1.7W T10)	1	1	1			
5	98502–03010	.SCREW, PAN HEAD	1	1	1			
6	92902–03100	.WASHER, WAVE	1	1	1			
7	4TR–83535–00	TUBE	1	1	1			
8	1JK–83578–00	KNOB, TRIP METER	1	1	1			
9	90157–02031	SCREW, PAN HEAD	1	1	1			
10	4TR–83513–00	DAMPER	1	1	1			
11	4TR–83526–00	DAMPER 2	2	2	2			
12	90201–05033	WASHER, PLATE	2	2	2			
13	95307–05700	NUT	2	2	2			
14	4VR–83550–00	SPEEDOMETER CABLE ASSY	1	1	1			

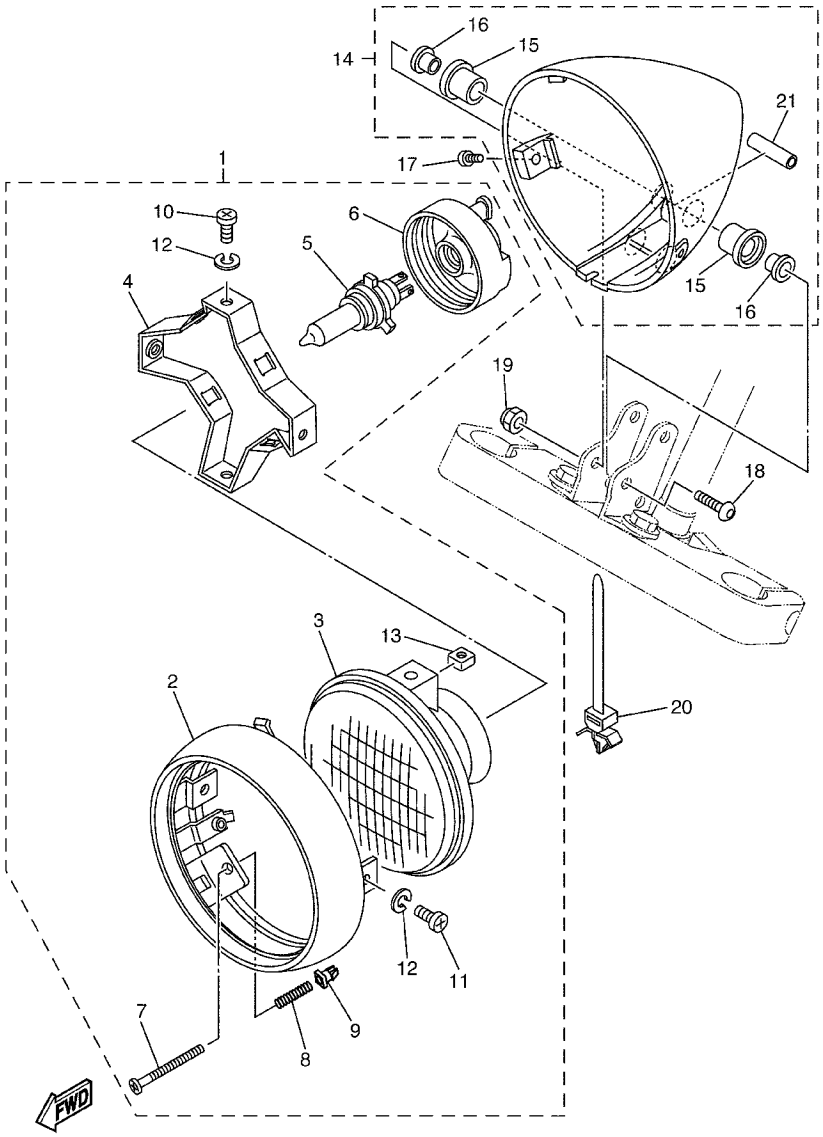

4XS8700A3601

FIG. 36 HEADLIGHT

REF. NO.	PART NO.	DESCRIPTION	5FBS	5FBT	5FBU			REMARKS
1	5KP–84310–01	HEADLIGHT UNIT ASSY	1	1	1			
2	5JX–84315–01	.RIM, HEADLIGHT	1	1	1			
3	5KP–84321–00	.LENS ASSY	1	1	1			
4	5JX–84316–00	.BRACKET	1	1	1			
5	2F9–84314–00	.BULB (12V-60/55W)	1	1	1			(H4)HALOGEN
6	4JG–84397–00	.COVER, SOCKET	1	1	1			
7	341–84331–60	.SCREW, RIM ADJUSTING	2	2	2			
8	5G2–84332–60	.SPRING, SCREW	2	2	2			
9	47J–84334–00	.NUT, ADJUSTING	2	2	2			
10	4KG–84365–00	.SCREW	2	2	2			
11	50W–84333–00	.SCREW	2	2	2			
12	92902–06100	.WASHER, SPRING	4	4	4			
13	4KG–84334–00	.NUT, ADJUSTING	2	2	2			
14	5JX–84330–10	BODY ASSY	1	1	1			
15	42X–84345–00	.DAMPER, HEADLIGHT	4	4	4			
16	1FK–84338–00	.COLLAR, BODY FITTING	4	4	4			
17	90157–05011	SCREW, PAN HEAD	2	2	2			
18	92014–06045	BOLT, BUTTON HEAD	2	2	2			
19	90176–06047	NUT,CAP	2	2	2			
20	90464–12089	CLAMP	1	1	1			
21	5JX-84388-00	.COLLAR 1	2	2	2			

FIG. 37 TAILLIGHT

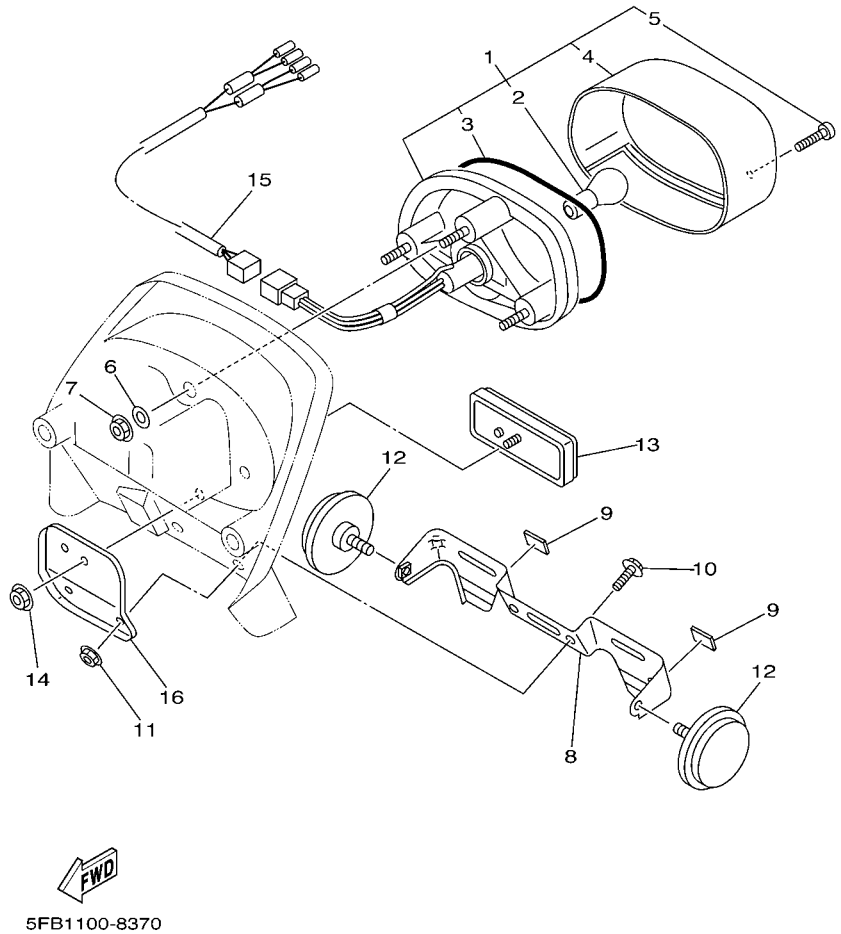

REF. NO.	PART NO.	DESCRIPTION	5FBS	5FBT	5FBU			REMARKS
1	4TV–84700–00	TAILLIGHT ASSY	1	1	1			
2	256–84714–60	.BULB (12V-21/5W)	1	1	1			
3	4TR–84723–00	.GASKET, TAIL LENS	1	1	1			
4	4TR–84733–00	.LENS, TAILLIGHT	1	1	1			
5	97706–40620	.SCREW, TAPPING	2	2	2			
6	90201–06380	WASHER, PLATE	3	3	3			
7	95607–06100	NUT, U	3	3	3			
8	5FB–84751–00	BRACKET, LICENSE	1	1	1			
9	51Y–21639–00	DAMPER 2	2	2	2			
10	95027–06014	BOLT, FLANGE	2	2	2			
11	95607–06100	NUT, U	2	2	2			
12	449–85131–02	REFLECTOR, REAR 1	2	2	2			
13	3Y6–85130–02	REAR REFLECTOR ASSY	1	1	1			
14	95707–05500	NUT, FLANGE	1	1	1			
15	5KP–84717–10	CORD, TAILLIGHT	1	1	1			
16	5FB–21617–00	BRACKET, FENDER	1	1	1			

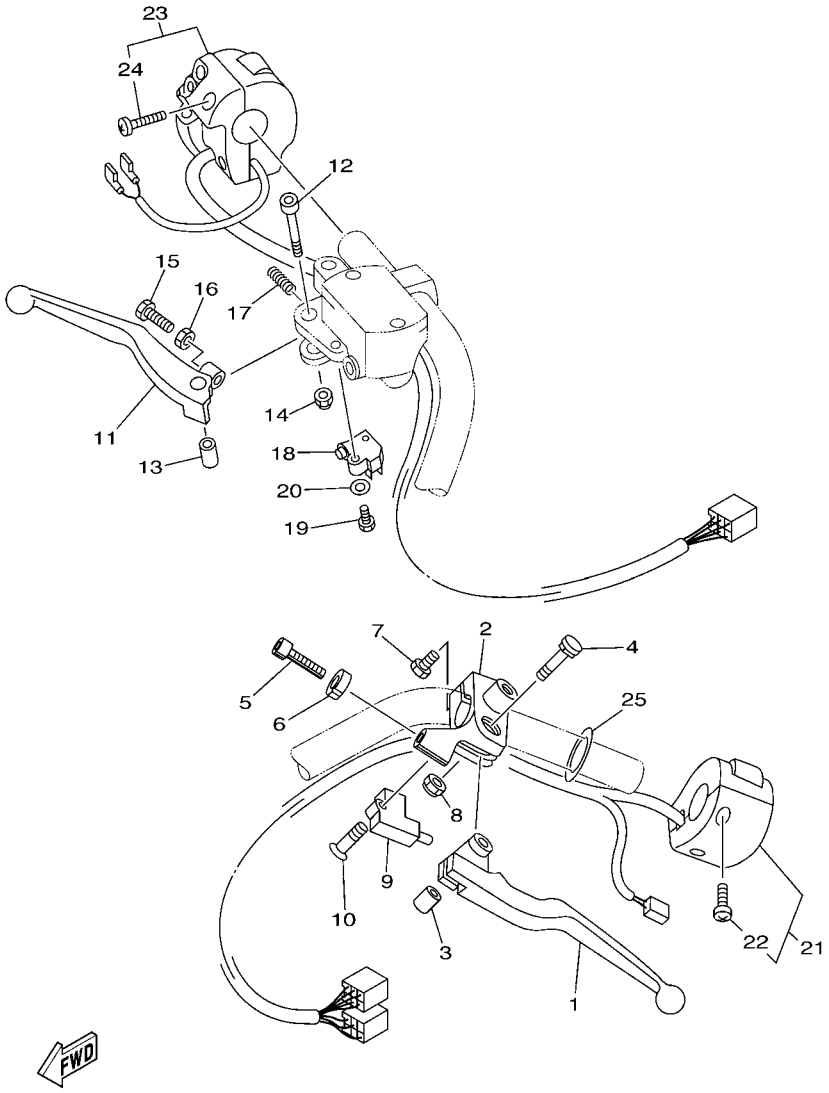

5FBD100-1380

FIG. 38 HANDLE SWITCH & LEVER

REF. NO.	PART NO.	DESCRIPTION	5FBS	5FBT	5FBU			REMARKS
1	4TR–83912–10	LEVER 1	1	1	1			
2	4TR–82911–10	HOLDER, LEVER 1	1	1	1			
3	4TR–83913–00	COLLAR, LEVER 1	1	1	1			
4	4TR–83945–00	BOLT, LEVER	1	1	1			
5	90123–08046	BOLT	1	1	1			
6	90179–08148	NUT	1	1	1			
7	97017–06020	BOLT	1	1	1			
8	95607–06100	NUT, U	1	1	1			
9	3YX–82917–01	SWITCH	1	1	1			
10	98704–03020	SCREW, FLAT HEAD	1	1	1			
11	36Y–83922–00	LEVER 2	1	1	1			
12	90110–06074	BOLT, HEXAGON SOCKET HEAD	1	1	1			
13	36Y–83913–01	COLLAR, LEVER 1	1	1	1			
14	95607–06100	NUT, U	1	1	1			
15	90149–06131	SCREW	1	1	1			
16	90170–06010	NUT	1	1	1			
17	90501–10312	SPRING, COMPRESSION	1	1	1			
18	36Y–83980–01	FRONT STOP SWITCH ASSY	1	1	1			
19	98507–04016	SCREW, PAN HEAD	1	1	1			
20	92907–04600	WASHER	1	1	1			
21	5FB–83973–20	SWITCH, HANDLE 3	1	1	1			
22	98580–05025	.SCREW, PAN HEAD	2	2	2			
23	5VN–83975–30	SWITCH, HANDLE 2	1	1	1			
24	98580–05025	.SCREW, PAN HEAD	2	2	2			
25	90202–26142	WASHER, PLATE	1	1	1			

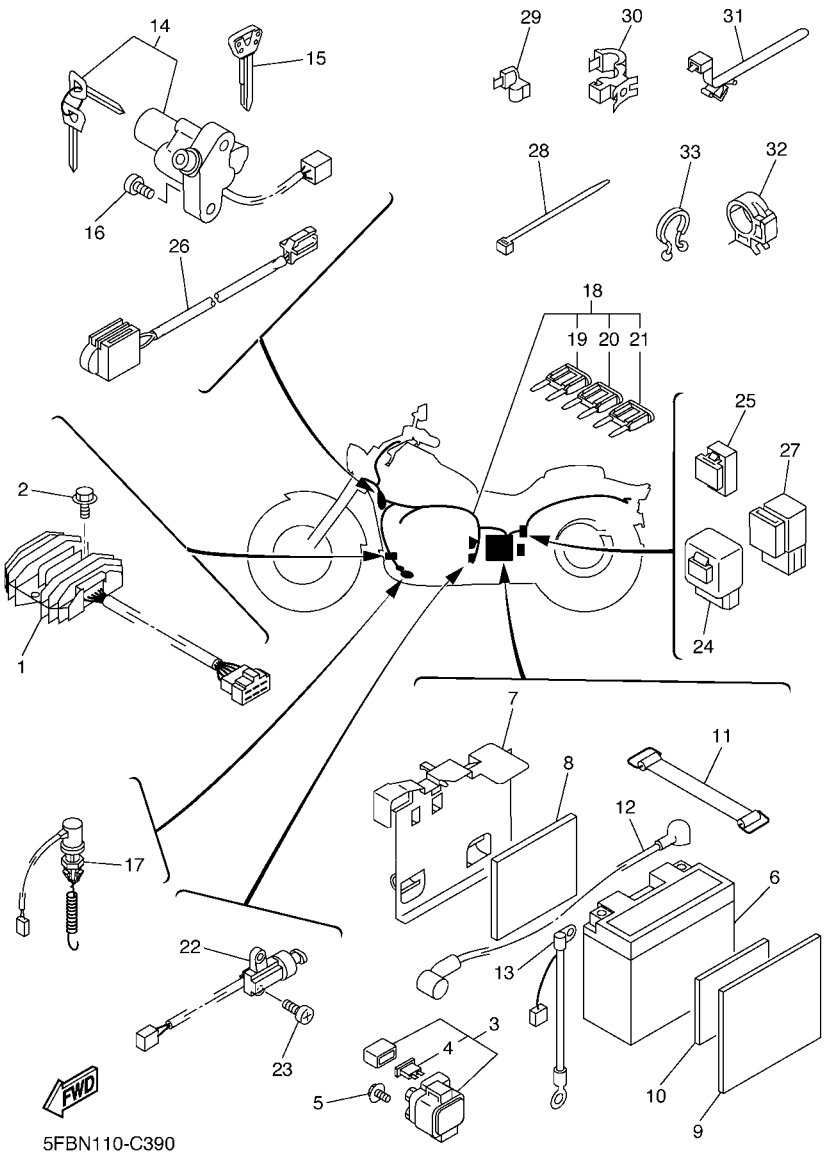

FIG. 39 ELECTRICAL 1

REF. NO.	PART NO.	DESCRIPTION	5FBS	5FBT	5FBU			REMARKS
1	5KP–81960–00	RECTIFIER & REGULATOR ASSY	1	1	1			
2	95804–06020	BOLT, FLANGE	2	2	2			
3	4BH–81940–01	STARTER RELAY ASSY	1	1	1			
4	1AE–82151–00	.FUSE (30A-BL)	2	2	2			
5	95027–06008	BOLT, FLANGE	2	2	2			
6	4TX–82100–02	BATTERY ASSY (GS GT12B-4)	1	1	1			
7	5BN–82129–00	COVER, BATTERY	1	1	1			
8	29N–14425–00	DAMPER 1	1	1	1			
9	4VR–2176E–00	PLATE	1	1	1			
10	29N–14425–00	DAMPER 1	1	1	1			
11	133–82131–00	BAND, BATTERY	1	1	1			
12	5BN–82115–00	WIRE, PLUS LEAD	1	1	1			
13	5BN–82116–00	WIRE, MINUS LEAD	1	1	1			
14	4TR–82501–01	MAIN SWITCH STEERING LOCK	1	1	1			
15	4BH–82511–09	BLANK KEY	1	1	1			AP
16	90149–08002	SCREW	2	2	2			
17	5KP–82530–00	STOP SWITCH ASSY	1	1	1			
18	5SC–82590–10	WIRE HARNESS ASSY	1		1			
	5SC–82590–20	WIRE HARNESS ASSY		1				
19	5JJ–82151–90	.FUSE (5A-BL)		2				
20	5JJ–82151–30	.FUSE (10A-BL)	3	3	3			
21	5JJ–82151–10	.FUSE (15A-BL)	3	3	3			
22	5RT–82566–B0	SWITCH, SIDE STAND	1	1	1			
23	90157–05079	SCREW, PAN HEAD	2	2	2			
24	5KS–81950–00	RELAY ASSY	1	1	1			
25	1UY–81950–92	RELAY ASSY	1	1	1			
26	5FU–82560–50	THERMO SWITCH ASSY	1	1	1			

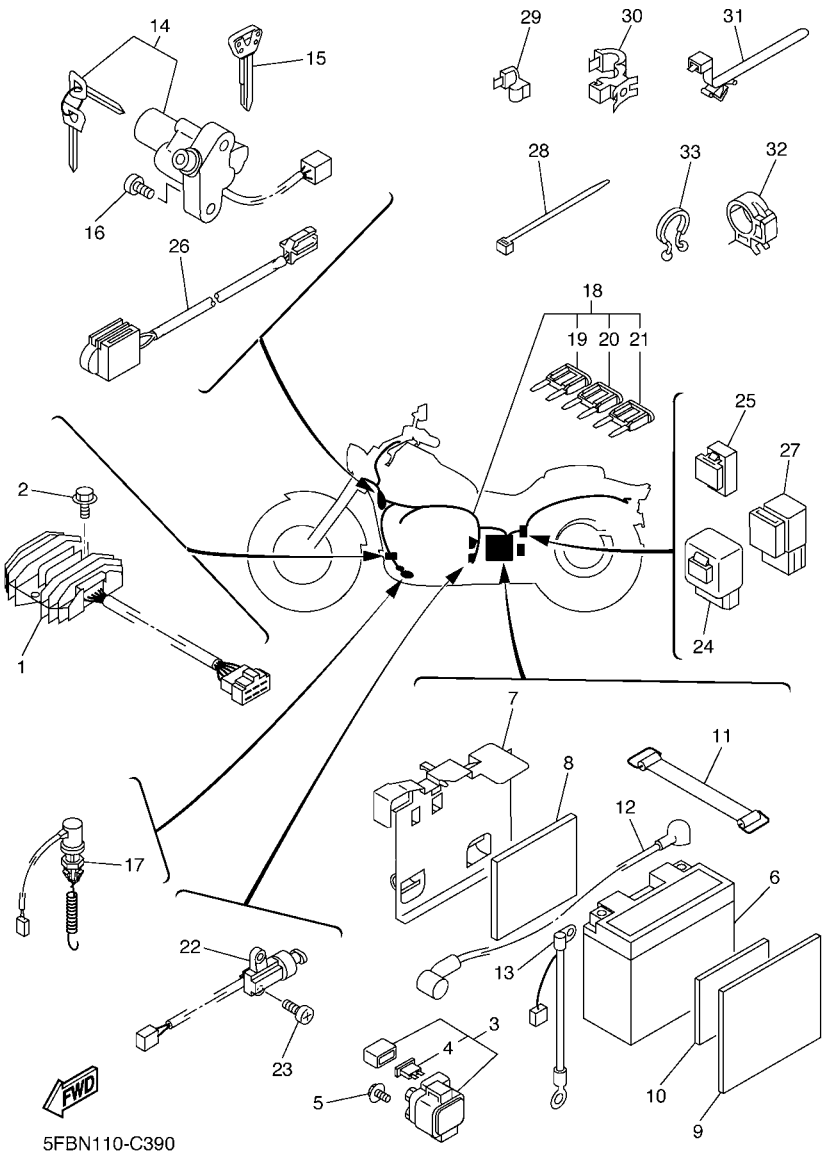

FIG. 39 ELECTRICAL 1

REF. NO.	PART NO.	DESCRIPTION	5FBS	5FBT	5FBU			REMARKS
27	29U–81950–93	RELAY ASSY		1				
28	1UA–82591–00	BAND	14	14	14			
29	90464–05188	CLAMP	3	3	3			
30	90464–20191	CLAMP	1	1	1			
31	90464–20213	CLAMP	1	1	1			
32	90464–10190	CLAMP		1				
33	90464–23041	CLAMP	1	1	1			

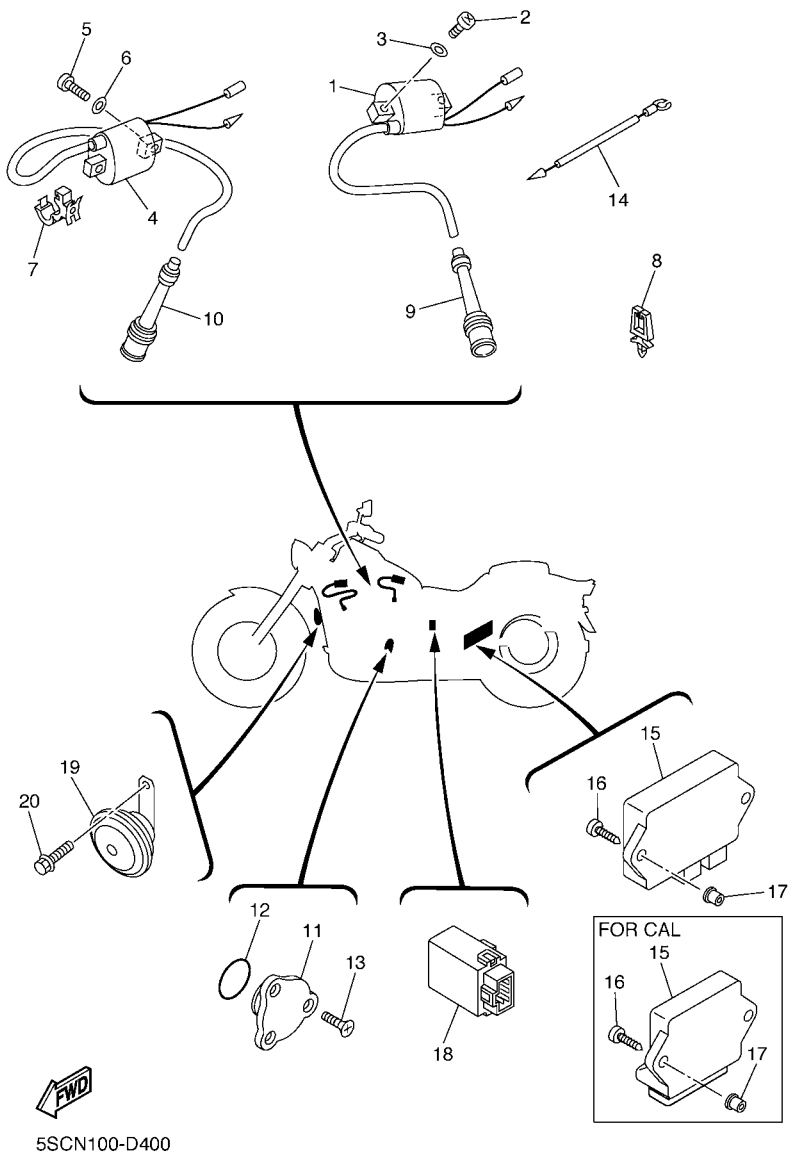

FIG. 40 ELECTRICAL 2

REF. NO.	PART NO.	DESCRIPTION	5FBS	5FBT	5FBU			REMARKS
1	4VR–82310–00	IGNITION COIL ASSY	1	1	1			
2	98507–05020	SCREW, PAN HEAD	2	2	2			
3	92907–05600	WASHER, PLATE	2	2	2			
4	4VR–82320–00	IGNITION COIL ASSY	1	1	1			
5	98507–05020	SCREW, PAN HEAD	2	2	2			
6	92907–05600	WASHER, PLATE	2	2	2			
7	90464–10190	CLAMP	1	1	1			
8	90464–05141	CLAMP	1	1	1			
9	1FK–82370–00	PLUG CAP ASSY	1	1	1			
10	4TR–82370–00	PLUG CAP ASSY	1	1	1			
11	1L9–82540–00	NEUTRAL SWITCH ASSY	1	1	1			
12	93210–29196	O-RING	1	1	1			
13	90149–05321	SCREW	3	3	3			
14	4TR–82509–00	WIRE, SUB LEAD	1	1	1			
15	5BN–82305–01	IGNITOR UNIT ASSY	1		1			
	5SC–82305–30	IGNITOR UNIT ASSY		1				
16	97707–60020	SCREW, TAPPING	2	2	2			
17	90338–08226	PLUG	2	2	2			
18	2UJ–83350–00	FLASHER RELAY ASSY	1	1	1			
19	5YS–83371–00	HORN	1	1	1			
20	90105–082A5	BOLT, FLANGE	1	1	1			

PART NO.	GRID NO.
4XP–11101–20	B – 2
5BN–11101–20	B – 2
4TR–1111F–00	B – 2
22U–1111F–01	B – 3
4VR–1111N–00	B – 4
4TR–1112F–00	B – 2
4H7–11133–11	B – 2
4TR–11142–00	B – 2
22U–11145–00	B – 7
4TR–11152–00	B – 2
22U–11165–00	B – 2
4TR–11166–00	B – 2
4VR–11181–10	B – 2
22U–11186–00	B – 3
4TR–11186–20	B – 2
22U–11187–00	B – 3
4TR–11187–20	B – 2
4VR–11190–00	B – 4
4VR–11190–10	B – 4
4VR–11191–00	B – 4
4VR–11192–00	B – 4
214–11198–01	C – 4
	D – 8
4VR–11310–20	B – 4
4VR–11320–20	B – 4
4VR–11351–00	B – 4
4TR–1135A–00	B – 2
4VR–11411–00	B – 5
22U–11416–80	C – 3
22U–11416–90	C – 3
4VR–11603–00	B – 5
4VR–11605–00	B – 5
4VR–11607–00	B – 5
4VR–11631–01–A0	B – 5
3LD–11633–00	B – 5
4VR–11636–00	B – 5
4VR–11638–00	B – 5
4VR–11650–00	B – 5
22U–11654–00	B – 5
3LD–11656–00	B – 5
3LD–11656–10	B – 5
3LD–11656–20	B – 5
3LD–11656–30	B – 5
4VR–12111–01	B – 6
3Y1–12114–01	B – 6
3Y1–12116–00	B – 6
3Y1–12117–01	B – 6
1J7–12118–00	B – 6

PART NO.	GRID NO.
1J7–12119–01	B – 6
4VR–12121–01	B – 6
22U–12151–00	B – 6
22U–12156–01	B – 6
22U–12159–00	B – 6
4VR–12171–00	B – 7
22U–12176–01	B – 7
4VR–12181–00	B – 7
11H–12210–02	B – 7
3BT–12213–00	B – 7
4VR–12231–00	B – 7
22U–12241–00	B – 7
4TR–12682–01	B – 10
4VR–13300–00	B – 8
22U–13324–00	B – 8
4VR–13325–00	B – 8
4TR–13410–00	B – 8
22U–13415–00	B – 8
4VR–13417–00	B – 8
4X7–13440–01	C – 6
4TR–13447–20	C – 6
4TR–13474–01	B – 9
5BN–13542–00	B – 15
5BN–13544–00	B – 15
16G–13569–00	B – 9
4TR–13575–00	B – 9
4MM–13582–00	B – 15
4TR–13586–01	B – 9
4VR–13594–00	B – 10
4TR–13596–01	B – 9
5KS–13907–00	D – 14
4TR–14103–00	B – 11
4LA–14105–00	B – 11
4TR–14105–00	B – 11
3CF–14107–10	B – 11
4DN–1410A–01	B – 11
5SC–1410H–00	B – 12
5SC–1410H–10	B – 12
3F9–14118–00	B – 11
35H–14139–00	B – 13
4KM–14142–20	B – 11
1HX–14147–00	B – 12
36Y–14147–00	B – 13
8F2–14147–00	B – 11
3G2–1414E–36	B – 11
3DM–1414M–34	B – 11
137–14153–00	B – 12
353–14186–00	B – 12

PART NO.	GRID NO.
12R–14191–00	B – 12
5LW–14191–00	B – 12
127–14198–00	B – 11
3DM–14216–00	B – 11
1AE–14227–00	B – 12
620–14231–18	B – 11
1HX–14231–20	B – 11
1AE–14237–00	B – 12
4HM–14239–00	B – 13
1WG–14251–00	B – 13
1AE–14261–00	B – 12
5SC–14261–00	B – 12
26H–14275–00	B – 12
5SC–14275–00	B – 12
4TR–14294–00	D – 14
4TR–14348–00	B – 12
4TR–1440F–00	B – 9
4TR–1440G–00	B – 9
4TR–14411–00	B – 9
4TR–14413–00	B – 9
4TR–14417–01	B – 9
4TR–14421–10	B – 9
29N–14425–00	F – 4
4VR–14431–01	B – 9
4TR–14437–00	B – 9
4TR–14451–00	B – 9
4TR–14452–00	B – 9
4TR–14453–00	B – 9
4TR–14455–00	B – 10
4TR–14456–00	B – 9
4TR–14463–00	B – 9
3KW–14486–00	B – 12
4TR–14499–00	B – 10
1FN–14565–00	B – 12
1HX–14565–00	B – 12
1UY–14565–00	B – 12
5BN–14603–00	B – 15
5BN–14604–00	B – 14
4BR–14613–00	B – 14
4TR–14613–00	B – 14
4TR–14615–02	B – 14
5SC–14620–00	B – 14
4XP–14620–01	B – 14
5BN–14703–01	B – 14
5SC–14703–10	B – 14
5BN–14704–01	B – 14
5SC–14704–10	B – 14
4BH–14714–00	B – 14

PART NO.	GRID NO.
42H–14714–10	B – 15
5BN–14808–00	B – 15
5BN–14840–00	B – 15
5BN–14857–01	B – 15
5BN–14858–00	B – 15
5BN–14871–00	B – 15
5BN–14872–00	B – 15
5BN–14875–00	C – 2
5BN–14881–00	C – 2
5BN–14881–10	C – 2
5BN–14882–00	B – 15
5BN–14883–00	B – 15
5BN–14884–00	B – 15
5BN–14885–00	B – 15
5SC–14900–20	B – 11
5BN–14900–40	B – 11
5SC–14901–20	B – 11
5BN–14901–40	B – 11
5SC–14902–20	B – 11
5BN–14902–40	B – 11
5BN–1490J–00	B – 11
3KW–1490K–00	B – 13
4TR–1490L–00	B – 13
4VR–14933–00	B – 11
4TR–14937–00	B – 12
22V–14940–00	B – 12
4TR–14940–00	B – 12
256–14956–01	B – 13
1HX–14985–00	B – 12
4TR–14987–00	B – 13
4TR–15100–20	C – 3
2H7–15361–00	C – 5
3F9–15362–00	C – 5
11H–15383–02	C – 3
4TR–15411–20	C – 5
4TR–15415–20	C – 5
4TR–15421–20	C – 5
4TR–15423–20	C – 6
4TR–15424–00	C – 5
22U–15441–01	C – 3
4VR–15451–00	C – 5
4VR–15461–00	C – 5
3BT–15484–00	C – 5
22U–15512–00	C – 7
4VR–15517–01	C – 7
5H0–15521–00	C – 7
4TR–15590–00	C – 7
4VR–16111–00	C – 8

PART NO.	GRID NO.
5BN–16150–00	C – 8
22U–16154–00	C – 8
22U–16321–00	C – 8
4X7–16324–00	C – 8
4X7–16325–00	C – 8
22U–16351–00	C – 8
4VR–16356–00	C – 8
22U–16357–00	C – 9
1W1–16358–01	C – 8
4VR–16371–00	C – 8
22U–16380–00	C – 8
4KU–17121–00	C – 10
4VR–17131–00	C – 10
3JB–17141–00	C – 10
4VR–17151–01	C – 10
22U–17211–00	C – 10
4KU–17221–00	C – 10
4VR–17231–00	C – 10
4TR–17241–00	C – 10
4VR–17251–01	C – 10
22U–17402–00	C – 10
4VR–17411–00	C – 10
22U–17524–00	C – 11
4VR–17527–00	C – 11
3H5–17529–00	C – 11
3JB–17531–00	C – 11
3JB–17531–10	C – 11
3JB–17531–20	C – 11
3JB–17531–30	C – 11
3JB–17531–40	C – 11
3JB–17531–50	C – 11
4H7–17537–00–20	C – 11
4H7–17537–00–30	C – 11
4H7–17537–00–40	C – 11
1J7–17537–Y0–30	D – 7
1J7–17537–Y0–40	D – 7
1J7–17537–Y0–50	D – 7
4VR–17553–00	C – 11
22U–17556–00	C – 11
56W–17590–00	D – 8
4TR–18110–00	C – 13
4TR–18112–00	C – 13
22N–18113–00	C – 13
3SX–18115–01	C – 13
4TR–18120–00	C – 13
4G0–18127–00	C – 13
4TR–18140–00	C – 13
2H9–18154–00	C – 13

PART NO.	GRID NO.
4H7–18185–00	C – 12
4TR–18511–00	C – 12
4TR–18512–00	C – 12
4TR–18513–00	C – 12
3YF–18531–00	C – 12
4TR–18535–00	C – 12
4TR–18540–02	C – 12
4UN–18542–00	C – 12
4UN–18566–00	C – 12
4VR–21110–50	C – 14
4VR–21110–60	C – 14
4VR–21161–00	C – 15
5KP–21266–00	C – 15
4R8–21308–00	D – 2
4VR–21315–00	C – 14
4VR–21317–00	C – 14
5BN–21317–00	C – 14
22F–2139X–00	D – 4
3SX–2139X–00	D – 2
5KP–2144G–00	C – 15
4TR–21460–01	C – 14
4TR–21460–10	C – 14
4TR–21510–10–P0	D – 2
4VR–21518–00	D – 2
3FY–21575–01	C – 15
5FB–21598–01	D – 2
4TR–2160A–00	D – 4
4TR–21613–10–P0	D – 2
4TR–21614–10–P0	D – 2
5FB–21617–00	F – 2
4TR–21629–00	D – 3
5FB–2162R–00	D – 2
51Y–21639–00	F – 2
4TR–21643–00	D – 2
5FB–21675–20	D – 2
4TR–21679–00	D – 3
55K–21708–00	D – 4
5BN–21711–10–PJ	D – 4
3XV–21717–00	D – 13
4TR–21717–00	D – 4
4TR–2171A–00	D – 13
4TR–2171E–20–P2	C – 14
1FK–2171L–00	D – 12
4TR–2171X–20–P2	C – 14
5BN–21721–00–PJ	D – 4
5SC–2172K–00	D – 4
4TR–21731–20	D – 4
3SP–21732–00	D – 2

NUMERICAL INDEX

PART NO.	GRID NO.
4VR–21741–00	D – 5
22F–21746–01	D – 4
3BN–21747–00	C – 14
4VR–2176E–00	F – 4
4TR–2177G–02	D – 4
4TR–2177G–10	D – 4
3LS–21781–10	D – 5
5FB–2179R–40	C – 15
5FB–2179V–40	C – 15
4VR–22110–30	D – 6
1J7–22141–00	D – 6
4KM–22141–00	D – 6
1J7–22143–00	D – 6
4GY–2214F–00	C – 15
4VR–22184–00	D – 6
4TR–22189–00	D – 6
5FB–22210–00	D – 6
5FB–22210–10	D – 6
5KP–23102–20	D – 10
5KP–23103–20	D – 10
5KP–23110–00	D – 10
1D0–23111–00	D – 10
4TR–23118–00	D – 10
4KM–23123–01	D – 11
4FM–23125–40	D – 10
5KP–23126–20	D – 10
5KP–23136–20	D – 10
5KP–23141–00	D – 10
4EB–23144–00	D – 10
4EB–23145–01	D – 10
36Y–23146–10	D – 10
5EL–23147–00	D – 11
4DW–23149–40	D – 10
26H–23156–00	D – 10
509–23158–L0	D – 10
5KP–23170–00	D – 10
5BN–23171–00	D – 10
4YR–23173–00	D – 10
4TR–23175–10	D – 9
4TR–23176–10	D – 9
278–23181–50	D – 10
43F–23188–10	D – 10
5EL–2331G–00	D – 11
5KP–23340–20	D – 11
5EL–23376–00	D – 11
5BN–23389–10	D – 9
1W1–23416–00	D – 9
26H–23418–01	D – 9

PART NO.	GRID NO.
4VR–23441–10	D – 9
4VR–23442–10	D – 9
3DM–23445–00	D – 9
3FV–23462–00	D – 11
4TR–2413B–00	D – 14
4TR–2413Y–00	D – 12
3HA–24141–00	C – 15
4TR–2414G–00	D – 13
5SC–2414H–00	D – 13
5SC–2414J–00	D – 13
5SC–2414K–00	D – 13
5FB–2416B–10	D – 12
2JU–24170–00	D – 13
5FB–2417B–10	D – 12
5PX–24180–00	D – 13
4H7–24181–00	D – 12
4TR–24182–00	D – 12
4TR–24183–00	D – 12
4BP–24188–00	D – 12
5BN–2419F–00	D – 13
5FB–24240–50	D – 12
4TR–24311–00	D – 13
5BN–24312–01	D – 13
4TR–24313–00	D – 12
5BN–24313–00	D – 14
5BN–24314–01	D – 13
5BN–24315–00	D – 13
5BN–24327–00	D – 13
4EB–24398–00	D – 13
4KM–24453–00	B – 13
4VR–24453–00	B – 12
4TR–24491–02	C – 15
4TR–24491–10	C – 15
21V–24500–11	D – 12
4X8–24512–00	D – 12
3AC–24523–00	D – 12
3AJ–24534–01	D – 12
1FK–24560–10	D – 12
1FK–24566–00	D – 13
5BN–24602–00	D – 12
4NK–24602–10	D – 12
4VR–24710–20	D – 15
4VR–24711–10	D – 15
4TR–24720–00	D – 15
35T–24724–00	D – 15
509–24724–00	D – 15
22W–24741–00	D – 15
4TR–24750–10	D – 15

PART NO.	GRID NO.
4TR–24751–10	D – 15
4TR–2475H–00	D – 15
4TR–2475J–00	D – 15
4TR–2475K–00	D – 15
4VR–25104–02	E – 2
4TR–25111–00	E – 2
341–25149–00	E – 2
5KS–25181–00	E – 2
4TR–25190–20	E – 2
4VR–25304–02	E – 4
3JB–25311–00–35	E – 4
2GV–25315–00	E – 4
2GV–25317–00	E – 4
1J7–25319–02	D – 8
4TR–25321–00	E – 4
4H7–2533A–02	E – 4
4H7–25351–00	E – 4
214–25355–00	E – 4
4TR–25364–00	E – 4
4TR–25366–00	E – 4
4TR–25371–00	E – 5
4TR–25381–00	E – 5
3HT–25398–00	E – 2
	E – 5
16G–25412–00	E – 4
4WM–2580U–20	E – 3
4BH–25815–00	E – 7
5BN–25827–00	E – 3
5BN–2582U–00	E – 3
341–25846–00	E – 2
4TR–25852–10	E – 7
4BH–25854–02	E – 7
4TR–25867–10	E – 7
4TR–25870–10	E – 7
5KP–25872–10	E – 7
4TR–25886–00	D – 9
36Y–2589H–00	E – 7
5JW–25914–10	E – 3
4BP–25919–00	E – 3
3YX–25929–00	E – 3
4TT–25937–00	E – 3
4VR–26111–20	E – 6
5PS–26133–01	E – 6
4NK–26240–00	E – 6
4NK–26241–00	E – 6
4VR–26280–02	E – 6
4NK–2628J–00	E – 6
4VR–26290–02	E – 6

PART NO.	GRID NO.
5KP–26311–10	E – 6
5KP–26312–10	E – 6
4TR–26331–00	D – 14
1VJ–26333–00	D – 14
5KP–26335–00	E – 6
1E6–26342–00	E – 6
4NK–2635J–00	E – 6
4TR–2637G–00	D – 14
5KP–27211–00	E – 8
4TR–27212–00	E – 8
4TR–27231–00	E – 8
4TR–27243–00	E – 8
5KP–27247–00	E – 8
4KU–27311–13	E – 8
5EL–27315–00	E – 9
5KP–27321–00	E – 9
5KP–27322–00	E – 8
5KP–27410–00	E – 9
4VR–27413–00	E – 9
5KP–27420–00	E – 9
4TR–27430–10	E – 9
120–27433–00	E – 9
4TR–27440–10	E – 10
1NH–27451–00	E – 9
1NH–27461–00	E – 9
4TR–28100–00	D – 5
4VR–28356–01	C – 15
4SV–28372–00	C – 14
4TR–46101–00	D – 7
2H7–46102–00	D – 7
22U–46117–00–25	D – 7
22U–46117–00–30	D – 7
22U–46117–00–40	D – 7
22U–46118–00–12	D – 7
22U–46118–00–14	D – 7
22U–46118–00–16	D – 7
22U–46118–00–18	D – 7
22U–46118–00–20	D – 7
22U–46123–00	D – 8
4H7–46125–00	D – 7
22U–46136–00	D – 7
22U–46137–00	D – 8
22U–46152–00	D – 7
22U–46153–00	D – 7
4TR–46154–00	D – 8
5BN–46171–00	D – 8
4X7–46180–00	D – 8
4TR–46297–00	D – 8

PART NO.	GRID NO.
84M–77555–00	D – 4
5SC–81410–00	E – 11
4VR–81450–00	E – 11
5SC–81517–00	B – 13
4VR–81815–00	C – 7
3HE–81826–00	C – 7
4XV–8182A–00	C – 7
3KS–81840–00	C – 7
11H–81844–00	C – 7
1FK–81847–00	C – 7
3JB–81890–00	C – 7
4BH–81940–01	F – 4
5KS–81950–00	F – 4
1UY–81950–92	F – 4
29U–81950–93	F – 5
5KP–81960–00	F – 4
4TX–82100–02	F – 4
4DH–82103–00	B – 11
5BN–82115–00	F – 4
5BN–82116–00	F – 4
5Y1–82122–00	D – 4
5BN–82129–00	F – 4
133–82131–00	F – 4
1AE–82151–00	F – 4
5JJ–82151–10	F – 4
5JJ–82151–30	F – 4
5JJ–82151–90	F – 4
5BN–82305–01	F – 6
5SC–82305–30	F – 6
4VR–82310–00	F – 6
4VR–82320–00	F – 6
1FK–82370–00	F – 6
4TR–82370–00	F – 6
4TR–82501–01	F – 4
4TR–82509–00	F – 6
4BH–82511–09	F – 4
5KP–82530–00	F – 4
1L9–82540–00	F – 6
5FU–82560–50	F – 4
5RT–82566–B0	F – 4
5SC–82590–10	F – 4
5SC–82590–20	F – 4
1UA–82591–00	D – 14
	F – 5
4TR–82911–10	F – 3
3YX–82917–01	F – 3
5PB–83310–10	E – 12
5VN–83311–00	E – 12

PART NO.	GRID NO.
5VN–83311–10	E – 12
1D6–83312–10	E – 13
5VN–83312–10	E – 12
1D6–83312–20	E – 12
5VN–83312–20	E – 12
1D6–83313–00	E – 12
1AA–83318–00	E – 13
5PB–83320–10	E – 12
1D6–83330–00	E – 12
1D6–83340–00	E – 13
4TR–83348–00	E – 13
2UJ–83350–00	F – 6
57M–83358–00	E – 12
1D6–83363–00	E – 12
1D6–83363–10	E – 12
5YS–83371–00	F – 6
4TR–83513–00	E – 14
1YT–83517–00	E – 14
2GV–83517–00	E – 14
5SC–83520–20	E – 14
4TR–83526–00	E – 14
4TR–83535–00	E – 14
4VR–83550–00	E – 14
1JK–83578–00	E – 14
4VR–83580–40	E – 14
4VR–83580–50	E – 14
5FU–83790–00	B – 11
5FU–83790–10	B – 11
4TR–83912–10	F – 3
4TR–83913–00	F – 3
36Y–83913–01	F – 3
36Y–83922–00	F – 3
4TR–83945–00	F – 3
5FB–83973–20	F – 3
5VN–83975–30	F – 3
36Y–83980–01	F – 3
5KP–84310–01	E – 15
2F9–84314–00	E – 15
5JX–84315–01	E – 15
5JX–84316–00	E – 15
5KP–84321–00	E – 15
5JX–84330–10	E – 15
341–84331–60	E – 15
5G2–84332–60	E – 15
50W–84333–00	E – 15
47J–84334–00	E – 15
4KG–84334–00	E – 15
1FK–84338–00	E – 15

PART NO.	GRID NO.
42X–84345–00	E – 15
4KG–84365–00	E – 15
4JG–84397–00	E – 15
2AL–84553–00	D – 9
4TV–84700–00	F – 2
256–84714–60	F – 2
5KP–84717–10	F – 2
4TR–84723–00	F – 2
4TR–84733–00	F – 2
5FB–84751–00	F – 2
11H–85110–01	D – 2
5FB–85112–00	D – 2
3Y6–85130–02	F – 2
449–85131–02	F – 2
4NK–85885–00	B – 13
2KR–W0041–00	E – 7
4WM–W0045–00	E – 3
3JB–W0047–00	E – 3
51L–W0048–00	E – 3
3JB–W0057–00	E – 3
4VR–W1752–00	C – 11
3DR–W253E–00	E – 4
4VR–Y1754–00	C – 11
4TR–Y2161–0F–PF	D – 2
4VR–Y2343–90	D – 9
5SC–Y2410–10–06	D – 12
4TR–Y2410–U1–X7	D – 12
90101–06534	E – 8
90101–06576	B – 14
90101–06764	E – 4
90101–10303	B – 7
90101–12694	C – 14
90105–062A2	C – 15
90105–082A4	C – 14
90105–082A5	E – 10
	F – 6
90105–08307	C – 14
90105–084A1	C – 14
90105–10152	E – 11
90105–101A9	D – 6
90105–10232	C – 14
90105–10253	C – 14
90105–10285	D – 8
90105–102A3	E – 9
90105–102A6	E – 8
90105–10638	E – 3
90105–10727	E – 9
90109–06468	E – 8

PART NO.	GRID NO.
90109–083G4	E – 3
90109–085G1	E – 5
90109–08781	B – 3
90109–08782	B – 3
90109–125F1	D – 6
90110–06010	C – 6
90110–06011	B – 4
90110–06059	B – 14
90110–06074	F – 3
90110–06200	D – 5
90110–06249	E – 8
90110–08019	B – 2
90110–08036	B – 14
90110–08212	E – 11
90116–08404	C – 3
90116–10405	C – 3
90116–10593	D – 7
90116–10611	C – 3
90119–06097	D – 4
90119–06118	D – 4
90119–06170	B – 4
90119–06236	C – 14
90119–08126	D – 7
90123–08046	F – 3
90149–05299	D – 13
90149–05321	C – 12
	F – 6
90149–06011	D – 12
90149–06131	F – 3
90149–06154	D – 2
90149–06302	B – 4
	D – 4
90149–08002	F – 4
90149–08067	C – 9
90149–08152	C – 3
90151–08022	C – 3
90154–05011	D – 3
90157–02031	E – 14
90157–05011	E – 15
90157–05079	F – 4
90157–10043	D – 2
90159–06016	C – 8
90167–05025	D – 3
90170–06010	F – 3
90170–06128	B – 6
90170–06228	C – 13
90170–10219	E – 4
90170–16256	C – 8

PART NO.	GRID NO.
90170–20310	C – 8
90170–22187	D – 4
90176–06047	D – 15
	E – 15
90176–06055	E – 12
90176–08080	B – 2
90176–10075	D – 8
90176–12052	D – 9
90176–22081	D – 9
90179–05523	D – 2
	D – 13
90179–06411	E – 8
90179–08148	F – 3
90179–08327	B – 5
90179–08684	C – 14
90179–10395	B – 2
90179–10658	C – 14
90179–12248	C – 14
90179–18396	C – 11
90179–25033	D – 9
90183–06023	D – 4
90183–06053	D – 4
90185–08097	B – 14
90185–14070	C – 11
90201–05033	E – 14
90201–06045	E – 12
90201–06062	D – 5
90201–062P7	B – 15
	E – 8
90201–06380	F – 2
90201–08016	B – 11
90201–08609	B – 2
90201–10118	E – 7
90201–10131	B – 2
90201–10591	B – 7
90201–107E9	E – 11
90201–112U0	D – 6
90201–12362	C – 13
90201–124G9	D – 6
90201–12575	C – 13
90201–12588	C – 13
90201–14220	D – 9
90201–14577	E – 4
90201–14633	C – 11
90201–152L7	E – 5
90201–18262	C – 8
90201–20279	E – 10
90201–220T0	D – 9

PART NO.	GRID NO.
90201–25290	C – 7
90202–05057	B – 15
90202–05193	D – 12
90202–24190	D – 9
90202–26142	D – 9
	F – 3
90206–14086	E – 8
90209–06011	D – 12
90209–22191	C – 10
90209–27192	C – 10
90214–16026	C – 8
90215–08229	B – 3
90215–16157	C – 8
90215–18178	C – 13
90215–22210	C – 8
90240–06108	E – 8
90240–08084	E – 9
90249–12008	E – 8
90267–32018	D – 4
90269–05039	D – 3
90280–05048	B – 5
90280–07036	C – 8
90338–08163	D – 9
90338–08174	B – 9
90338–08226	F – 6
90338–10132	B – 15
90340–14117	C – 5
90340–14132	C – 4
	D – 8
90340–32001	C – 5
90380–28131	B – 7
90387–06043	B – 4
90387–06076	E – 12
90387–064M9	D – 5
90387–067N5	D – 2
90387–087K5	E – 9
90387–1003G	E – 8
90387–123X6	D – 6
90387–1510D	D – 8
90387–151R1	E – 5
90387–16547	C – 3
90387–173M5	E – 2
90387–173R6	E – 2
90387–17543	D – 6
90387–2511R	C – 11
90387–256G9	D – 7
90401–10159	E – 7
90401–16166	B – 3

PART NO.	GRID NO.
90430–08119	C – 8
90430–17168	B – 3
90445–11587	B – 9
90445–16641	E – 9
90446–14359	D – 4
90460–53200	B – 9
90461–15139	D – 13
90462–08070	C – 6
90462–10115	C – 6
90464–05141	F – 6
90464–05188	F – 5
90464–06214	E – 6
90464–09M31	D – 12
90464–10190	F – 5
	F – 6
90464–12089	E – 15
90464–15157	D – 9
90464–15192	D – 13
	E – 6
90464–18246	D – 9
90464–20191	D – 14
	F – 5
90464–20213	F – 5
90464–23041	F – 5
90467–08092	C – 2
90467–10038	D – 12
90467–10039	B – 9
90467–10041	D – 13
90467–11032	D – 13
90467–11106	B – 9
90467–12053	D – 13
90467–12124	D – 14
90467–14015	B – 2
90467–19065	B – 15
90468–08104	B – 15
90480–01559	D – 4
90480–10289	D – 5
90480–12320	C – 15
	D – 4
90480–13018	B – 3
	B – 4
90480–13398	B – 10
	D – 2
90480–18418	D – 2
90480–24186	D – 4
90501–06022	C – 12
90501–10245	E – 8
90501–10312	F – 3

PART NO.	GRID NO.
90501–15722	D – 8
90501–23738	C – 8
90501–60716	C – 11
90506–08227	C – 13
90506–20193	E – 8
90506–23490	E – 9
90506–29507	E – 9
90507–20002	E – 4
90508–16577	C – 8
90508–18696	E – 9
90508–290B5	C – 13
90508–32536	C – 13
90560–06244	E – 12
91314–06012	D – 4
91314–06020	B – 8
	B – 15
	D – 5
91314–06025	B – 7
	B – 8
	C – 5
	E – 7
91314–06030	C – 5
91314–06035	B – 3
	C – 5
91314–06040	C – 5
91314–06045	C – 5
91314–06055	C – 3
	C – 5
91314–06065	C – 5
91314–06070	C – 6
91314–08025	D – 9
91314–08030	D – 9
91314–08040	D – 11
91314–08060	C – 3
91314–08100	C – 3
91314–10030	D – 11
91317–06012	C – 6
91317–06016	B – 10
91317–06020	B – 9
91317–06025	D – 15
91317–06030	B – 8
91317–06045	C – 3
91317–06085	B – 4
91317–06095	C – 3
91317–08080	C – 3
91380–06045	C – 3
91401–20012	E – 8
91401–20015	E – 10

PART NO.	GRID NO.
91401–25015	E – 9
91701–06032	E – 10
91815–16017	C – 3
	C – 6
92014–05016	B – 9
92014–06035	C – 6
92014–06045	E – 15
92014–08040	D – 2
92017–06012	D – 12
92017–08025	B – 14
92017–10016	B – 14
92017–10020	B – 14
92902–03100	E – 14
92902–06100	E – 15
92904–06600	B – 3
92907–04600	F – 3
92907–05200	B – 15
92907–05600	F – 6
92907–06100	D – 15
	E – 8
92907–06200	B – 15
	C – 8
92907–06600	B – 3
	B – 7
	B – 10
	B – 15
	E – 11
92990–06600	B – 14
	C – 7
92990–10600	D – 8
93101–14089	C – 5
93101–30084	D – 7
93101–35097	C – 11
93101–38098	D – 7
93102–12106	C – 13
93102–18278	C – 8
93102–25017	D – 6
93102–28022	E – 2
93102–65277	D – 8
93105–45017	E – 2
93109–12075	C – 5
93109–18020	D – 6
93210–09525	C – 8
93210–10096	B – 8
93210–14369	C – 5
93210–15151	B – 8
93210–15566	C – 6
93210–18322	C – 3

PART NO.	GRID NO.
93210–27370	C – 5
93210–29196	F – 6
93210–32172	C – 5
93210–36769	B – 9
93210–48530	E – 4
93210–60426	D – 7
93210–61750	E – 4
93210–62446	B – 3
93210–64297	C – 6
93210–71360	C – 11
93210–74316	C – 5
93210–84724	B – 4
93210–89568	B – 2
93211–00612	B – 2
93211–39569	D – 7
93306–00401	C – 10
	C – 11
93306–00428	C – 10
93306–20711	C – 11
93306–30212	E – 4
93306–30213	E – 4
93306–30317	E – 2
93306–30525	C – 10
93306–30539	D – 7
93306–90602	C – 12
93311–21044	D – 8
93311–43729	D – 7
93315–21813	C – 8
93316–01301	D – 7
93332–00010	D – 6
93399–99931	D – 9
93399–99932	D – 11
93410–22039	D – 8
93440–12052	B – 2
93440–20088	D – 8
93440–25084	C – 10
93440–30077	C – 10
93450–22027	B – 5
93515–32029	C – 9
93604–16092	C – 12
93604–20156	C – 12
93605–10108	B – 7
94110–1908T	E – 2
94110–1908V	E – 2
94117–1508U	E – 4
94117–1508W	E – 4
94210–19222	E – 2
94210–19224	E – 2

PART NO.	GRID NO.
94217–15298	E – 4
94217–15299	E – 4
94317–15172	E – 4
94317–15173	E – 4
94321–19135	E – 2
94321–19157	E – 2
94425–19585	E – 2
94435–15586	E – 4
94591–41118	B – 7
94701–00262	B – 3
95024–06025	D – 9
95024–06030	E – 12
95024–08025	B – 14
95027–06008	F – 4
95027–06010	D – 9
95027–06014	F – 2
95027–06030	E – 12
95027–08012	D – 2
95304–06700	C – 13
95304–06800	E – 12
95304–08700	E – 6
95307–05700	E – 14
95307–06600	C – 8
95307–06700	E – 8
95307–12700	E – 13
95604–08200	E – 5
95604–14200	E – 5
95607–05100	B – 15
95607–06100	E – 9
	F – 2
	F – 3
95607–10200	E – 8
95607–12100	D – 6
95607–12200	D – 6
95617–08630	B – 2
95704–06500	E – 12
95707–05500	D – 2
	F – 2
95707–06500	D – 9
95707–10500	B – 2
95804–06020	F – 4
95807–06010	D – 14
95807–06012	C – 15
	D – 2
95807–06014	C – 15
95807–06025	E – 12
95814–10100	C – 14
95817–08014	C – 14

PART NO.	GRID NO.
95817–08016	D – 12
95817–08020	C – 14
95817–08045	C – 14
95817–10025	C – 14
95827–08035	C – 11
97007–06012	D – 15
97017–06020	F – 3
97024–06016	B – 3
97024–06020	C – 13
97027–06016	B – 3
	B – 7
97070–06025	C – 7
97706–40620	F – 2
97707–40106	B – 10
97707–50125	B – 9
97707–60020	F – 6
97707–60114	B – 15
97707–60120	B – 15
98502–03010	E – 14
98507–03008	D – 12
98507–04008	B – 12
98507–04016	F – 3
98507–05008	E – 6
98507–05020	F – 6
98507–06020	E – 11
98507–06030	E – 11
98580–05025	F – 3
98704–03020	F – 3
98707–04014	B – 12
98707–05035	C – 12
98907–05010	D – 13
99001–10600	C – 13
99009–11400	B – 8
99009–12400	C – 13
99009–18400	D – 8
99009–19400	E – 8
99009–25500	C – 5
99530–10114	C – 5
99530–10120	C – 5
99530–14016	C – 3
99530–17016	B – 2

PART NO.	GRID NO.

PART NO.	GRID NO.